STATE OF ALASKA

DEPARTMENT OF TRANSPORTATION AND PUBLIC FACILITIES

REVISIONS		
NO.	DATE	DESCRIPTION

STATE	PROJECT DESIGNATION	YEAR	SHEET NO.	TOTAL 'A' SHEETS
ALASKA	0311032/Z53610000	2019	A1	A4
			PLAN SET TOTAL	###

ROUTE: 130000	MILEPOINT: 16.97-22.55
LATITUDE: 60.357752	LONGITUDE: -149.351857

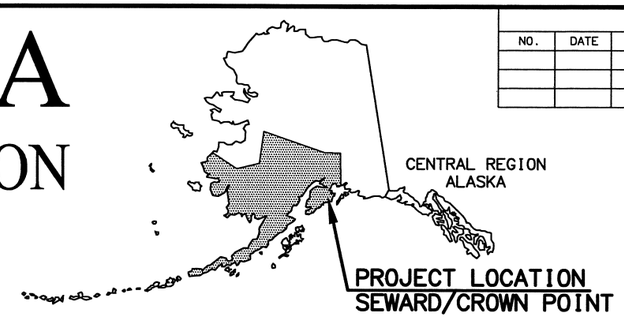

PROPOSED HIGHWAY PROJECT

SEWARD HWY: MP 17-22.5 REHABILITATION

0311032/Z53610000

GRADING, DRAINAGE, PAVING, BRIDGE, SIGNING, AND STRIPING

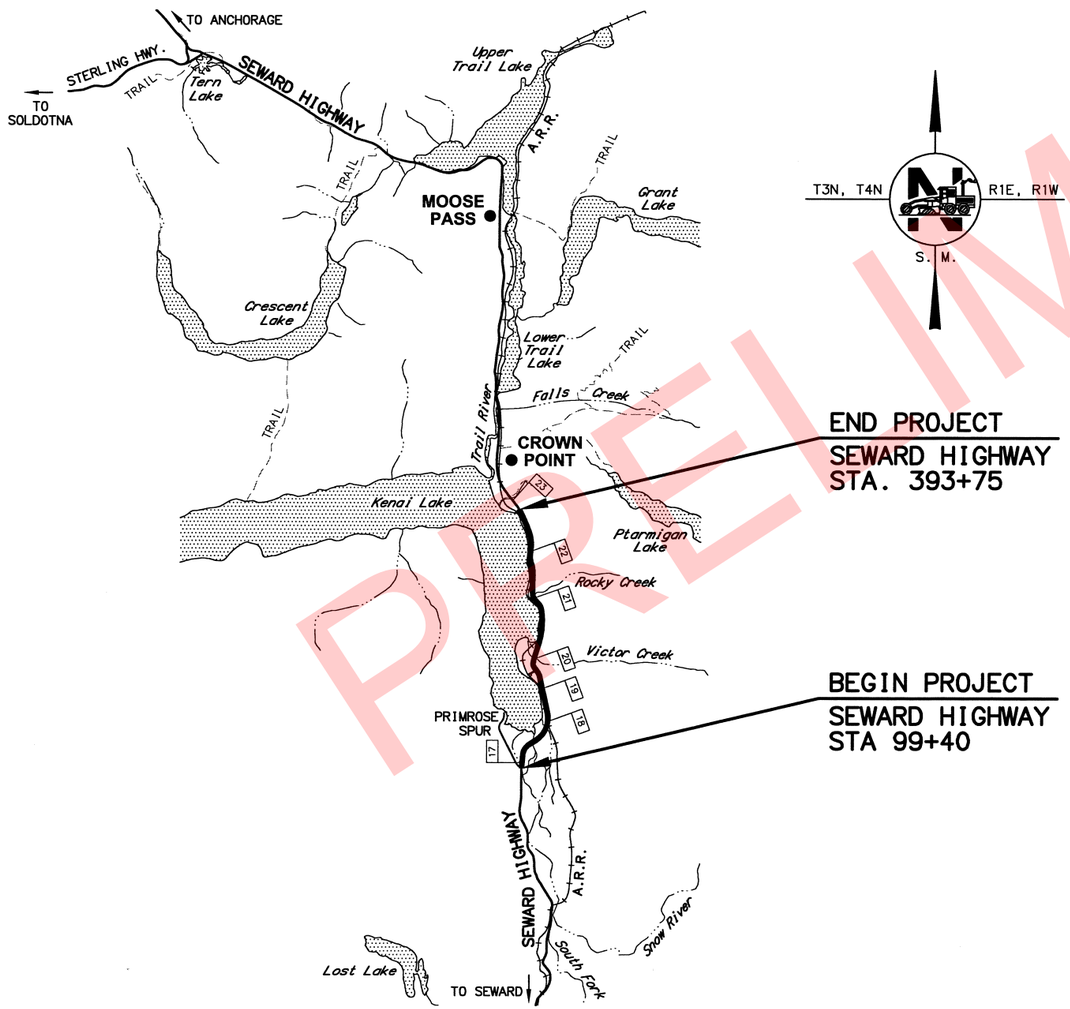

PROJECT SUMMARY		
ROADWAY SECTION	WIDTH	LENGTH
SEWARD HIGHWAY	37'	5.57 MILES
SNOW RIVER WEST CHANNEL 603	35'-2"	188'-6"
SNOW RIVER CENTER CHANNEL 605	35'-2"	648'-6"
VICTOR CREEK BRIDGE 607	40'-4"	240'-0"

DESIGN DESIGNATIONS	
	SEWARD HIGHWAY
FUNCTIONAL CLASS	RURAL ARTERIAL
AADT (2013)	1,870
AADT (2023)	2,070
DESIGN SPEED (V) (MPH)	55
DHV (2013)	375
DHV (2023)	415
T-PERCENT COMMERCIAL TRUCKS (%)	16.4
D-DIRECTIONAL DISTRIBUTION (%)	60/40
ESALS	421,303

VOL 2 of 2

PRELIMINARY

PS&E REVIEW
APRIL 2018

STATE OF ALASKA
DEPARTMENT OF TRANSPORTATION
& PUBLIC FACILITIES

APPROVED:

REGIONAL PRE-CONSTRUCTION ENGINEER DATE

CONCUR:

DIRECTOR, DESIGN & CONSTRUCTION DATE
CERTIFIED TRUE & CORRECT AS-BUILT OF ACTUAL FIELD CONDITION:

CONSTRUCTION PROJECT MANAGER DATE

DRAWING LOCATION
W:\Projects\Seward Hwy MP 17-22.5 Rehabilitation - 53610\Civ3D16\Planset\53610_A01_Title.dwg

DATE TIME 3/6/2018 11:43 AM | LAYOUT A01 | SCALE | XREF'S NONE | DESIGNED BY CML/KDS | CHECKED BY KEK | DRAFTED BY VJS

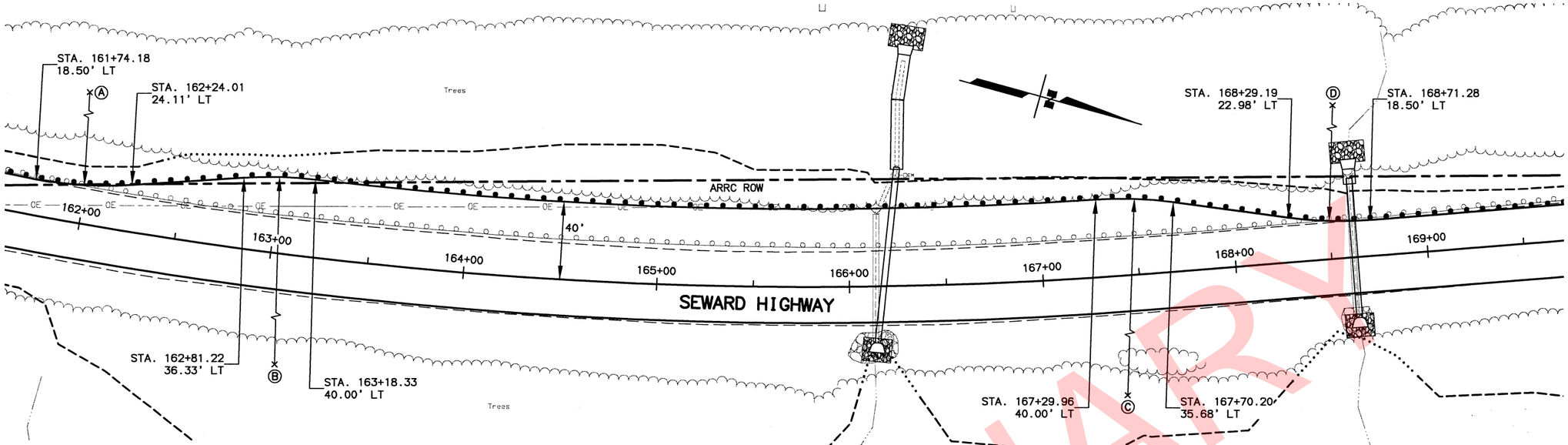

RADIUS TABLE

POINT	STATION	OFFSET	RADIUS (FT)	REMARKS
Ⓐ	161+74.18	218.50' LT	200	
Ⓑ	163+18.33	160.00' RT	200	
Ⓒ	167+29.96	160.00' RT	200	
Ⓓ	168+171.28	218.50' LT	200	

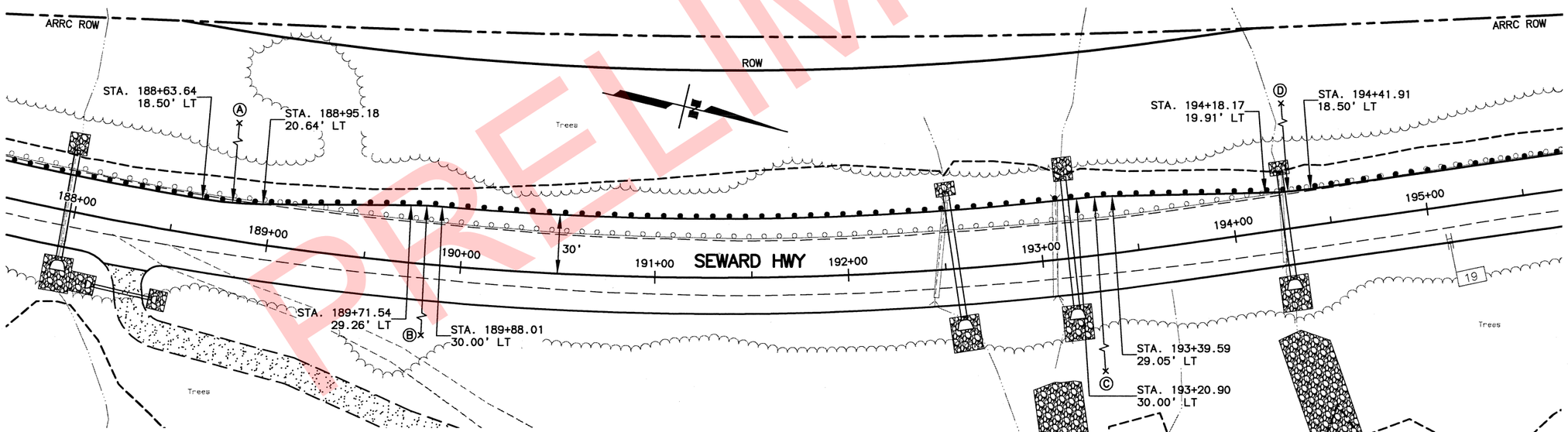

RADIUS TABLE

POINT	STATION	OFFSET	RADIUS (FT)	REMARKS
Ⓐ	188+63.64	218.50' LT	200	
Ⓑ	189+88.01	170.00' RT	200	
Ⓒ	193+20.90	170.00' RT	200	
Ⓓ	194+41.91	218.50' LT	200	

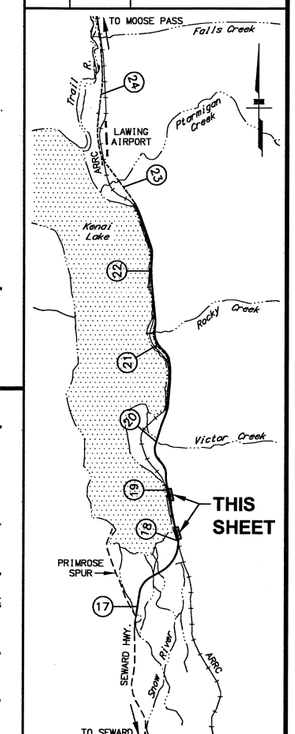

PLANS DEVELOPED BY:
STATE OF ALASKA
DEPARTMENT OF TRANSPORTATION
AND PUBLIC FACILITIES
4111 AVIATION AVENUE
ANCHORAGE, AK 99502
(907) 269-0590

STATE OF ALASKA
KRISTEN L. FELDER
CE 11132
REGISTERED PROFESSIONAL ENGINEER
PS&E REVIEW

STATE OF ALASKA
DEPARTMENT OF TRANSPORTATION
AND PUBLIC FACILITIES
SEWARD HIGHWAY
MP 17-22.5
REHABILITATION

TURNOUT LAYOUT PLANS

SHEET NO.	TOTAL SHEETS
G1	G17
STATE	YEAR
ALASKA	2019

PROJECT DESIGNATION
311032/Z536100000

ADDENDUM NO.

ATTACHMENT NO.

REVISIONS

NO.	DATE	DESCRIPTION

DESIGNED BY CML\KDS
CHECKED BY KEK
DRAFTED BY VJS

XREFS: XR-53610-Border_PandP
XR-53610_Design_XR-53610_Base
XR-53610_ROW

SCALE 1"= 30'

LAYOUT G1

DATE TIME 3/8/2018 9:57 AM

DRAWING LOCATION
W:\Projects\Seward Hwy MP 17-22.5 Rehabilitation - 53610\Civ3016\Planset\53610_G01-G07_Pull-outs.dwg

PRELIMINARY

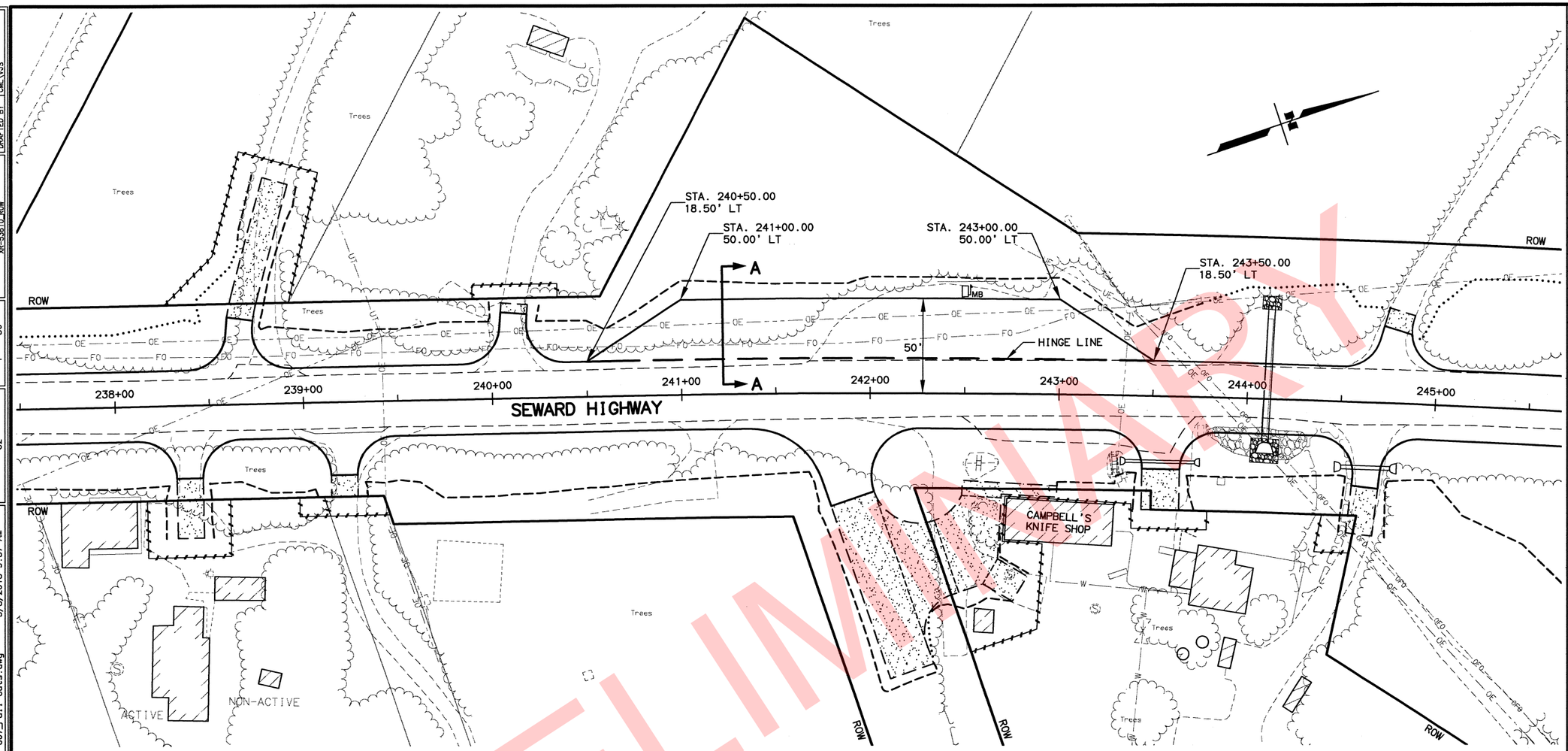

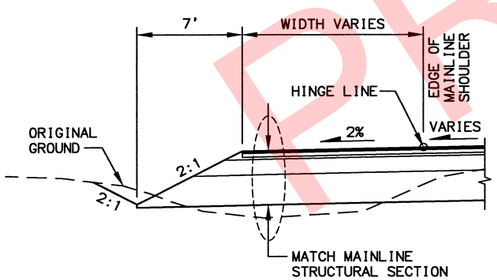

SECTION A-A

STA. 240+50 TO STA. 243+50 LT

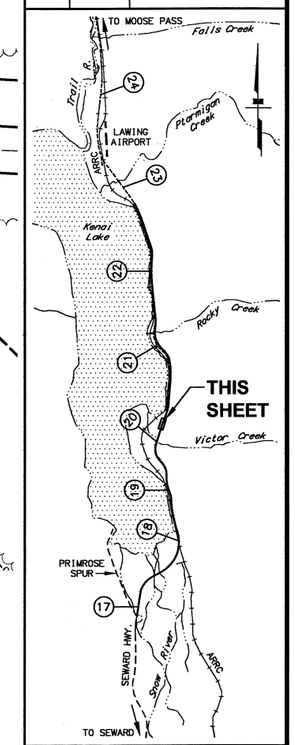

SHEET NO.	TOTAL SHEETS
G2	G17
STATE	YEAR
ALASKA	2019

PROJECT DESIGNATION

311032/Z536100000

ADDENDUM NO.

ATTACHMENT NO.

REVISIONS

NO.	DATE	DESCRIPTION

PLANS DEVELOPED BY:
STATE OF ALASKA
DEPARTMENT OF TRANSPORTATION
AND PUBLIC FACILITIES
4111 AVIATION AVENUE
ANCHORAGE, AK 99502
(907) 269-0590

STATE OF ALASKA
DEPARTMENT OF TRANSPORTATION
AND PUBLIC FACILITIES

SEWARD HIGHWAY
MP 17-22.5
REHABILITATION

TURNOUT LAYOUT PLANS

DRAWING LOCATION
W:\Projects\Seward Hwy MP 17-22.5 Rehabilitation - 53610\Civ3D16\Planset\53610_G01-G07_Pull-outs.dwg

DATE TIME 3/8/2018 9:57 AM
LAYOUT G2
SCALE 1" = 30'
XREFS: XR-53610-Border_PondP XR-53610_Design_XR-53610_Base XR-53610_ROW
DESIGNED BY OML\GDS
CHECKED BY KEK
DRAFTED BY OML\VJS

PRELIMINARY
PS&E REVIEW

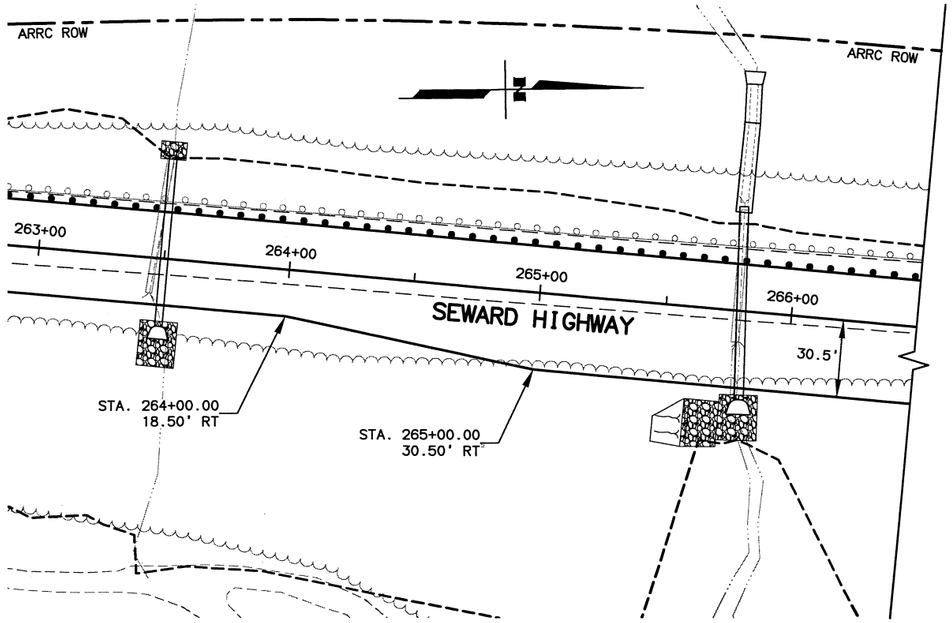

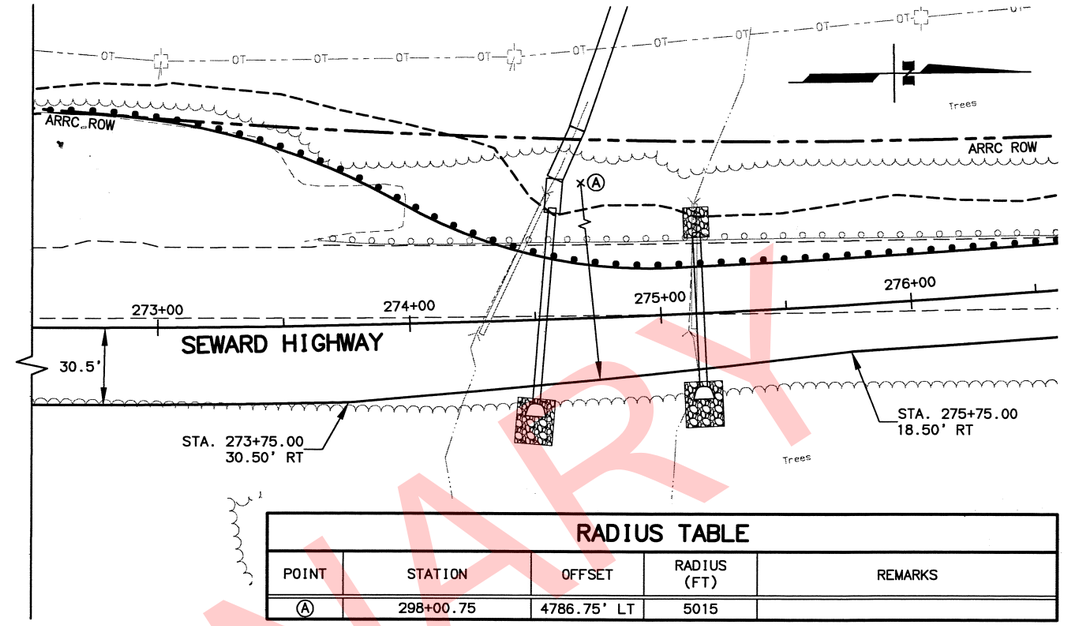

RADIUS TABLE

POINT	STATION	OFFSET	RADIUS (FT)	REMARKS
Ⓐ	298+00.75	4786.75' LT	5015	

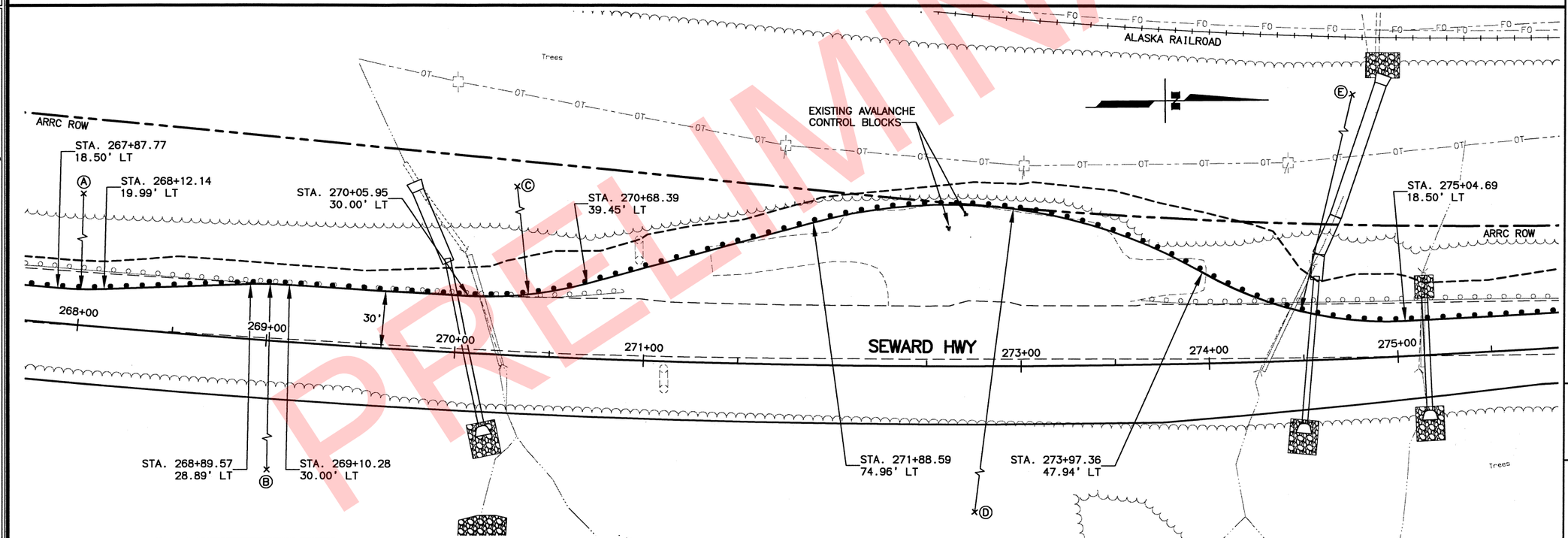

RADIUS TABLE

POINT	STATION	OFFSET	RADIUS (FT)	REMARKS
Ⓐ	267+87.77	218.50' LT	200	
Ⓑ	269+10.28	170.00' RT	200	
Ⓒ	270+05.95	230.00' LT	200	
Ⓓ	272+61.39	190.1' RT	275	
Ⓔ	275+04.69	218.50' LT	200	

PRELIMINARY

SHEET NO.	TOTAL SHEETS
G3	G17
STATE	YEAR
ALASKA	2019

PROJECT DESIGNATION

311032/Z536100000

ADDENDUM NO.

ATTACHMENT NO.

REVISIONS

NO.	DATE	DESCRIPTION

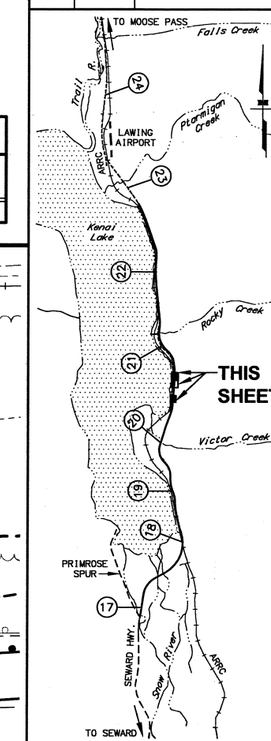

PLANS DEVELOPED BY:
STATE OF ALASKA
DEPARTMENT OF TRANSPORTATION
AND PUBLIC FACILITIES
4111 AVIATION AVENUE
ANCHORAGE, AK 99502
(907) 269-0590

STATE OF ALASKA
KRISTEN L. FEIBER
REGISTERED PROFESSIONAL ENGINEER
PS&E REVIEW

STATE OF ALASKA
DEPARTMENT OF TRANSPORTATION
AND PUBLIC FACILITIES

SEWARD HIGHWAY
MP 17-22.5
REHABILITATION

TURNOUT LAYOUT PLANS

DRAWING LOCATION
W:\Projects\Seward Hwy MP 17-22.5 Rehabilitation - 53610\Civ3D16\Planset\53610_G01-G07_Pull-outs.dwg

DATE TIME
3/8/2018 9:57 AM

SCALE
1" = 30'

LAYOUT
G3

DESIGNED BY CML\KDS
CHECKED BY KEK
DRAFTED BY CML\VJS

XREFS: XR-53610-Border_PandP
XR-53610_Design, XR-53610_Base
XR-53610_ROW

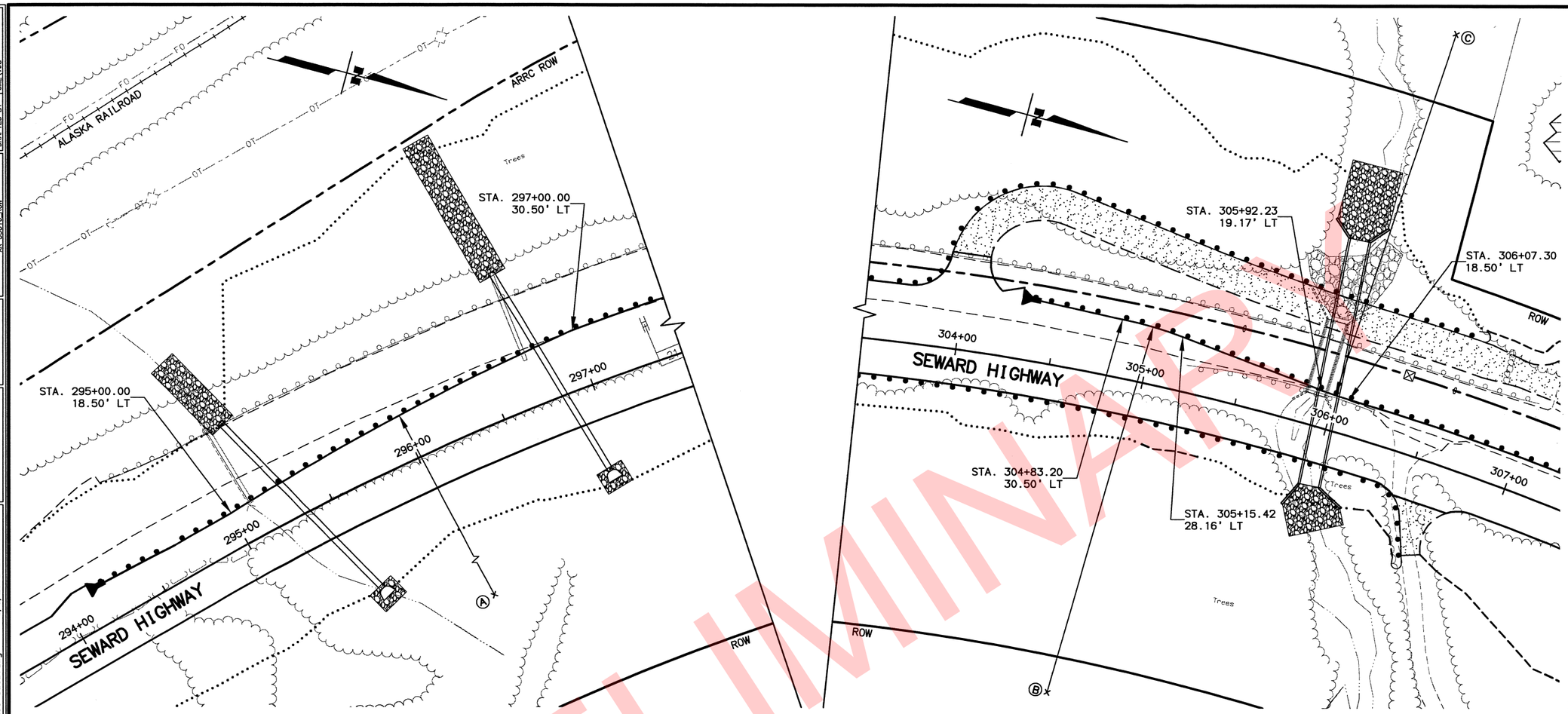

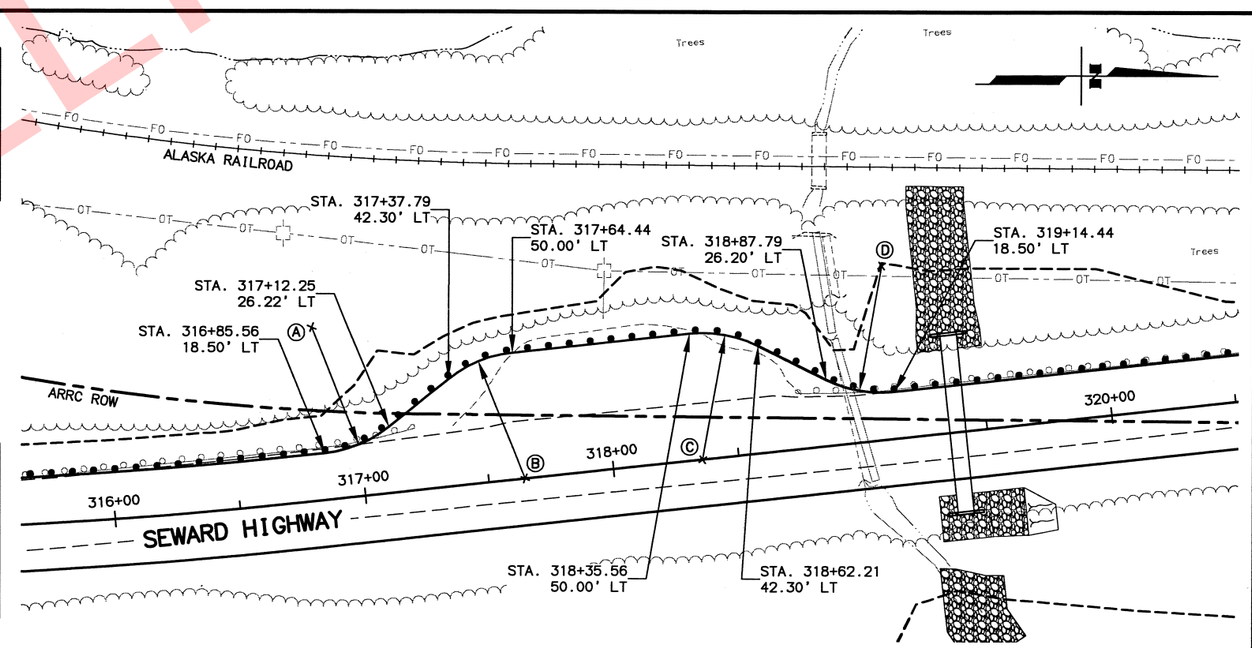

RADIUS TABLE (ABOVE)

POINT	STATION	OFFSET	RADIUS (FT)	REMARKS
Ⓐ	308+54.36	1335.21 RT	1425	
Ⓑ	267+87.77	218.50' LT	200	
Ⓒ	269+10.28	170.00' RT	200	

RADIUS TABLE (RIGHT)

POINT	STATION	OFFSET	RADIUS (FT)	REMARKS
Ⓐ	316+85.56	68.50' LT	50	
Ⓑ	317+64.44	0.00'	50	
Ⓒ	318+35.56	0.00'	50	
Ⓓ	319+14.44	68.50' LT	50	

SHEET NO.	TOTAL SHEETS
G4	G17
STATE	YEAR
ALASKA	2019

PROJECT DESIGNATION

311032/Z536100000

ADDENDUM NO.

ATTACHMENT NO.

REVISIONS

NO.	DATE	DESCRIPTION

PLANS DEVELOPED BY:
STATE OF ALASKA
DEPARTMENT OF TRANSPORTATION
AND PUBLIC FACILITIES
4111 AVIATION AVENUE
ANCHORAGE, AK 99502
(907) 269-0590

STATE OF ALASKA
KRISTOPHER J. FOLEY
132
REGISTERED PROFESSIONAL ENGINEER
PS&E REVIEW

STATE OF ALASKA
DEPARTMENT OF TRANSPORTATION
AND PUBLIC FACILITIES

SEWARD HIGHWAY
MP 17-22.5
REHABILITATION

TURNOUT LAYOUT PLANS

DRAWING LOCATION
W:\Projects\Seward Hwy MP 17-22.5 Rehabilitation - 53610\Civ3D16\Planset\53610_G01-G07_Pull-outs.dwg

DATE TIME
3/8/2018 9:57 AM

LAYOUT
G4

SCALE
1" = 30'

XREFS: XR-53610-Border_PandP
XR-53610_Design, XR-53610_Base
XR-53610_ROW

DESIGNED BY CML\KDS
CHECKED BY KEK
DRAFTED BY CML\KJS

PRELIMINARY

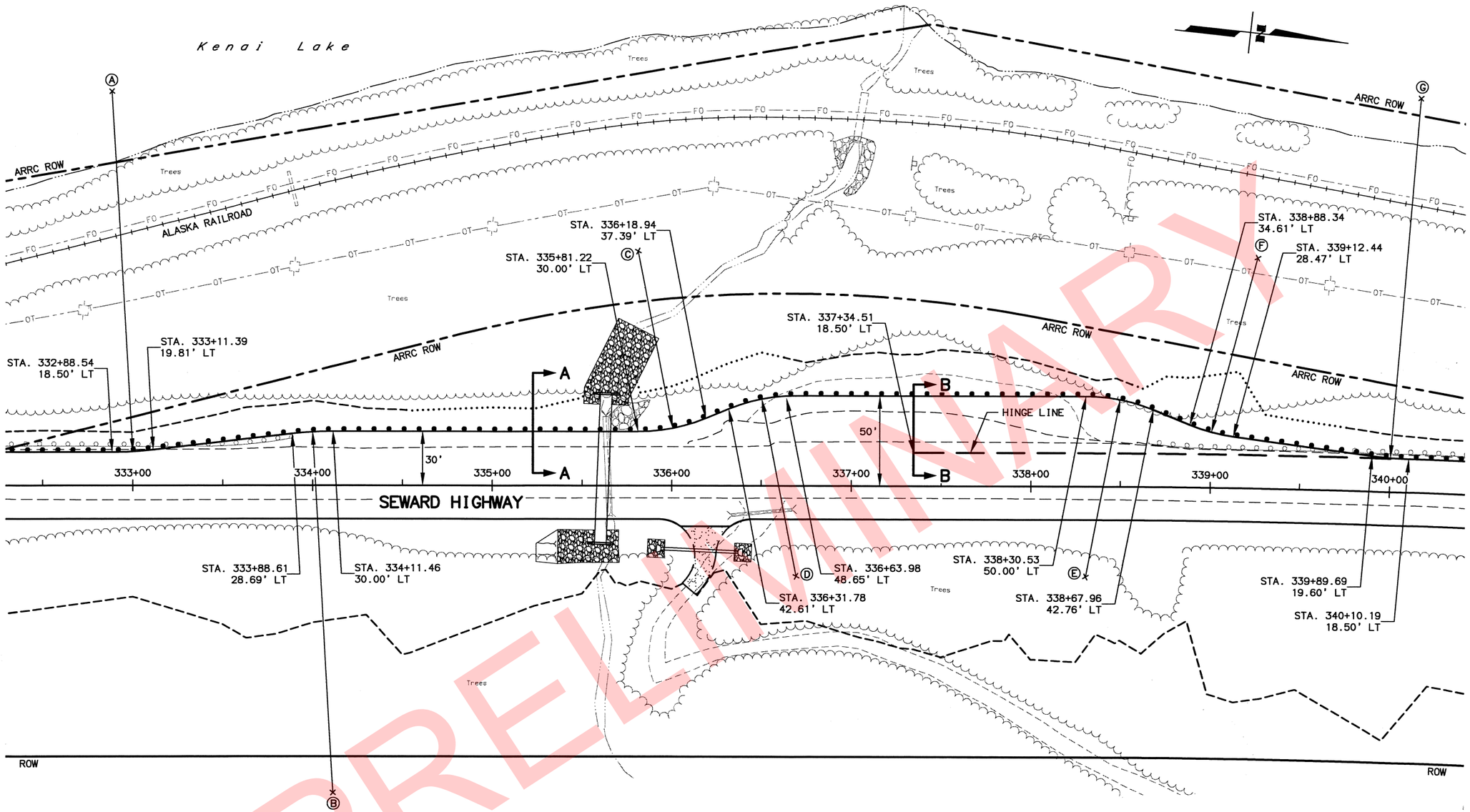

PRELIMINARY

RADIUS TABLE

POINT	STATION	OFFSET	RADIUS (FT)	REMARKS
Ⓐ	332+88.54	218.50' LT	200	
Ⓑ	334+11.46	170.00' RT	200	
Ⓒ	335+81.22	130.00' LT	100	
Ⓓ	336+69.50	50.00' RT	100	
Ⓔ	338+30.57	50.00' RT	100	
Ⓕ	339+24.22	127.75' LT	100	
Ⓖ	340+10.19	218.50' LT	200	

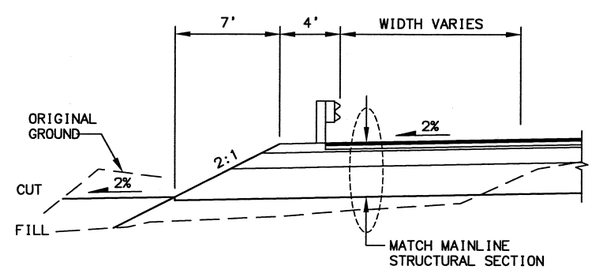

SECTION A-A

STA. 332+88.54 TO STA. 337+34.51 LT

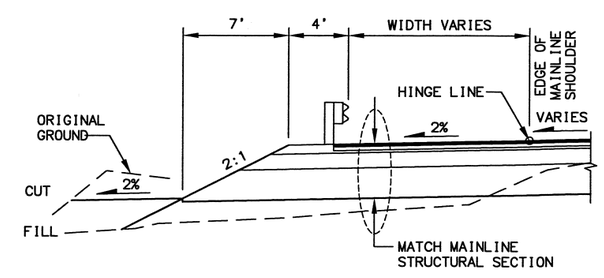

SECTION B-B

STA. 337+34.51 TO STA. 340+10.19 LT

NOTE: STA. 337+34.51 IS THE BEGINNING OF THE SUPERELEVATION TRANSITION.

SHEET NO.	TOTAL SHEETS
G5	G17
STATE	YEAR
ALASKA	2019

PROJECT DESIGNATION

311032/Z536100000

ADDENDUM NO.

ATTACHMENT NO.

REVISIONS

NO.	DATE	DESCRIPTION

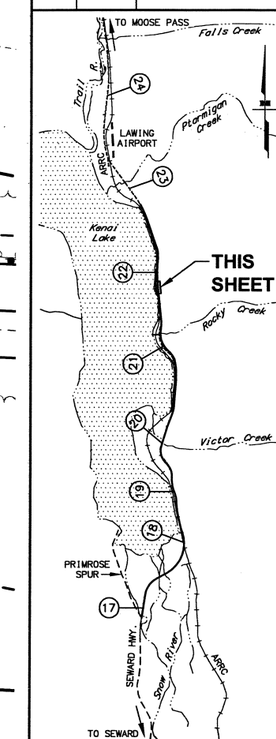

PLANS DEVELOPED BY:
STATE OF ALASKA
DEPARTMENT OF TRANSPORTATION AND PUBLIC FACILITIES
4111 AVIATION AVENUE
ANCHORAGE, AK 99502
(907) 269-0590

STATE OF ALASKA
KRISTEN KEMER
CE 11132
REGISTERED PROFESSIONAL ENGINEER
PS&E REVIEW

STATE OF ALASKA
DEPARTMENT OF TRANSPORTATION AND PUBLIC FACILITIES

SEWARD HIGHWAY
MP 17-22.5
REHABILITATION

TURNOUT LAYOUT PLANS

DRAWING LOCATION: W:\Projects\Seward Hwy MP 17-22.5 Rehabilitation - 53610\Civ3D16\Planset\53610_G01-G07_Pull-outs.dwg
DATE TIME: 3/8/2018 9:57 AM
LAYOUT: G5
SCALE: 1" = 30'
XREFS: XR-53610-Border_PandP, XR-53610_Design, XR-53610_Base, XR-53610_ROW
DESIGNED BY: CML\KDS
CHECKED BY: KEK
DRAFTED BY: CML\VJS

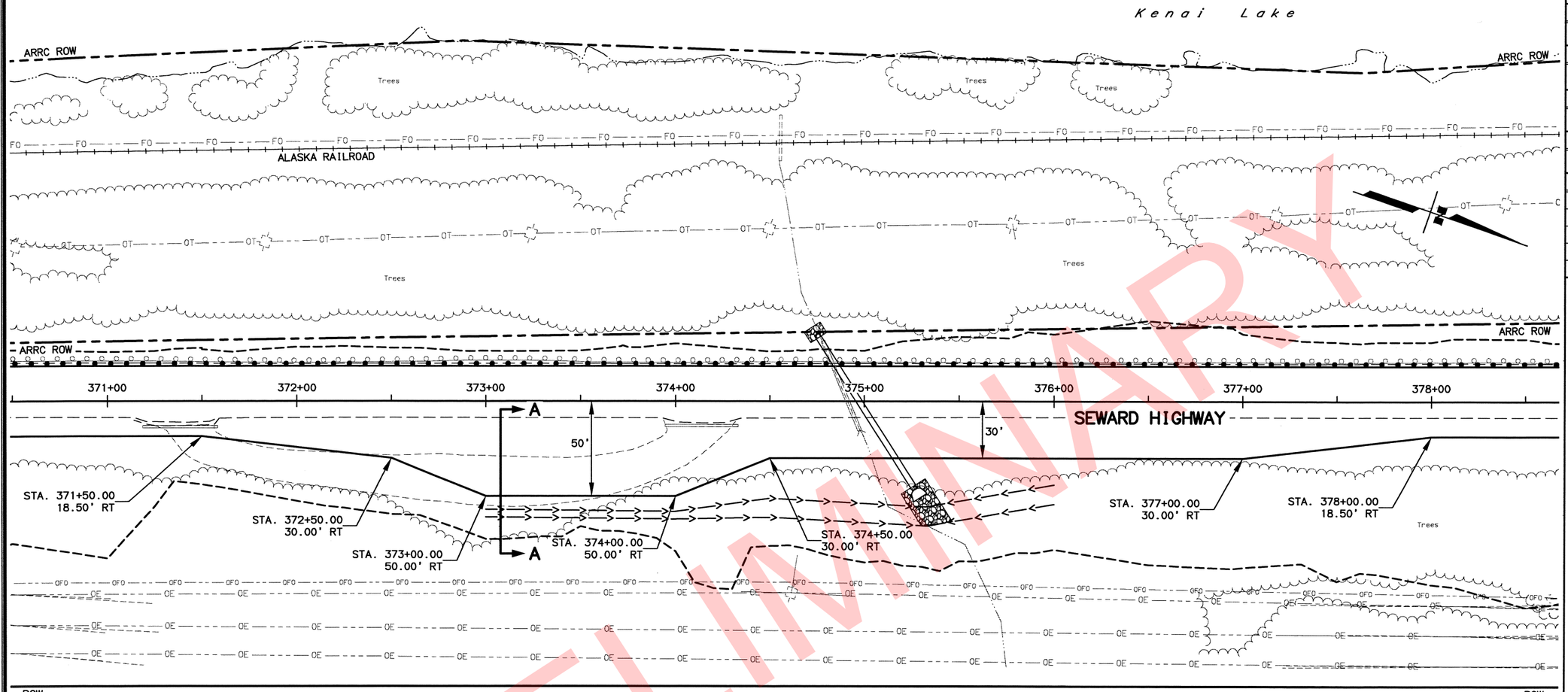

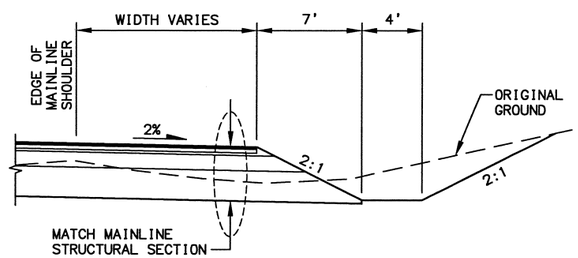

SECTION A-A

SEE SPECIAL DITCH DETAILS

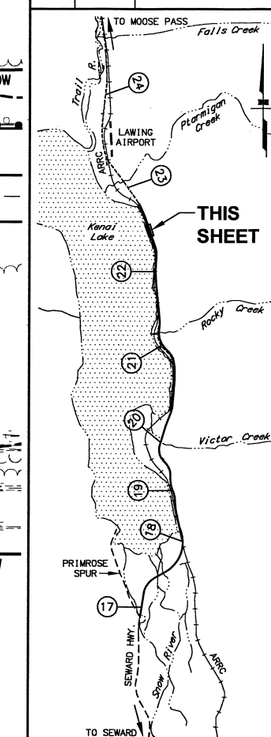

SHEET NO.	TOTAL SHEETS
G6	G17
STATE	YEAR
ALASKA	2019

PROJECT DESIGNATION

311032/Z536100000

ADDENDUM NO.

ATTACHMENT NO.

REVISIONS

NO.	DATE	DESCRIPTION

PLANS DEVELOPED BY:
STATE OF ALASKA
DEPARTMENT OF TRANSPORTATION
AND PUBLIC FACILITIES
4111 AVIATION AVENUE
ANCHORAGE, AK 99502
(907) 269-0590

STATE OF ALASKA
KRISTEN L. FELDER
CE 11132
REGISTERED PROFESSIONAL ENGINEER
PS&E REVIEW

STATE OF ALASKA
DEPARTMENT OF TRANSPORTATION
AND PUBLIC FACILITIES

SEWARD HIGHWAY
MP 17-22.5
REHABILITATION

TURNOUT LAYOUT PLANS

DRAWING LOCATION
W:\Projects\Seward Hwy MP 17-22.5 Rehabilitation - 53610\Civ3D16\Planset\53610_G01-G07_Pull-outs.dwg

DATE TIME
3/8/2018 9:57 AM

LAYOUT
G6

SCALE
1" = 30'

XREFS: XR-53610-Border_PandP
XR-53610_Design, XR-53610_Base
XR-53610_ROW

DESIGNED BY CML\KDS
CHECKED BY KEK
DRAFTED BY CML\VJS

PRELIMINARY

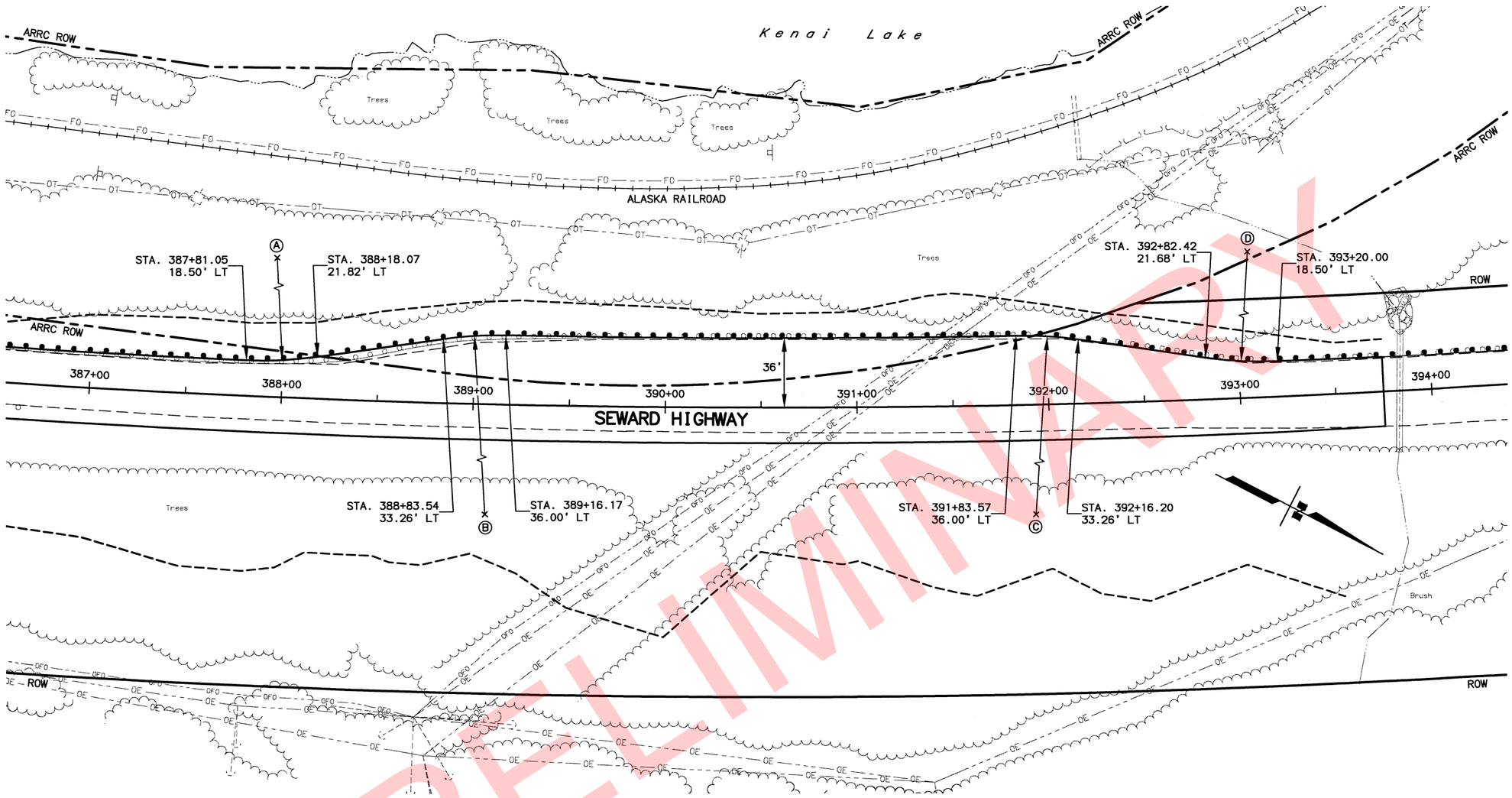

PRELIMINARY

RADIUS TABLE

POINT	STATION	OFFSET	RADIUS (FT)	REMARKS
Ⓐ	387+81.05	218.50' LT	200	
Ⓑ	389+16.17	164.00' RT	200	
Ⓒ	391+83.57	164.00' RT	200	
Ⓓ	393+18.70	218.50' LT	200	

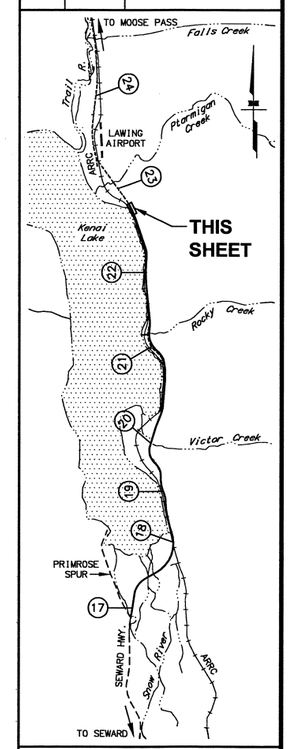

PLANS DEVELOPED BY:
STATE OF ALASKA
DEPARTMENT OF TRANSPORTATION
AND PUBLIC FACILITIES
4111 AVIATION AVENUE
ANCHORAGE, AK 99502
(907) 269-0590

STATE OF ALASKA
DEPARTMENT OF TRANSPORTATION
AND PUBLIC FACILITIES

SEWARD HIGHWAY
MP 17-22.5
REHABILITATION

TURNOUT LAYOUT PLANS

SHEET NO.	TOTAL SHEETS
G7	G17
STATE	YEAR
ALASKA	2019

PROJECT DESIGNATION
311032/Z536100000

ADDENDUM NO.

ATTACHMENT NO.

REVISIONS

NO.	DATE	DESCRIPTION

DESIGNED BY CML\KDS
CHECKED BY KEK
DRAFTED BY CML\KJJS

XREFS: XR-53610-Border_PondP, XR-53610_Base, XR-53610_DesLon, XR-53610_ROW

SCALE 1" = 30'

LAYOUT G7

DATE TIME 3/8/2018 9:57 AM

DRAWING LOCATION
W:\Projects\Seward Hwy MP 17-22.5 Rehabilitation - 53610\Civ3016\Planset\53610_G01-G07_Pull-outs.dwg

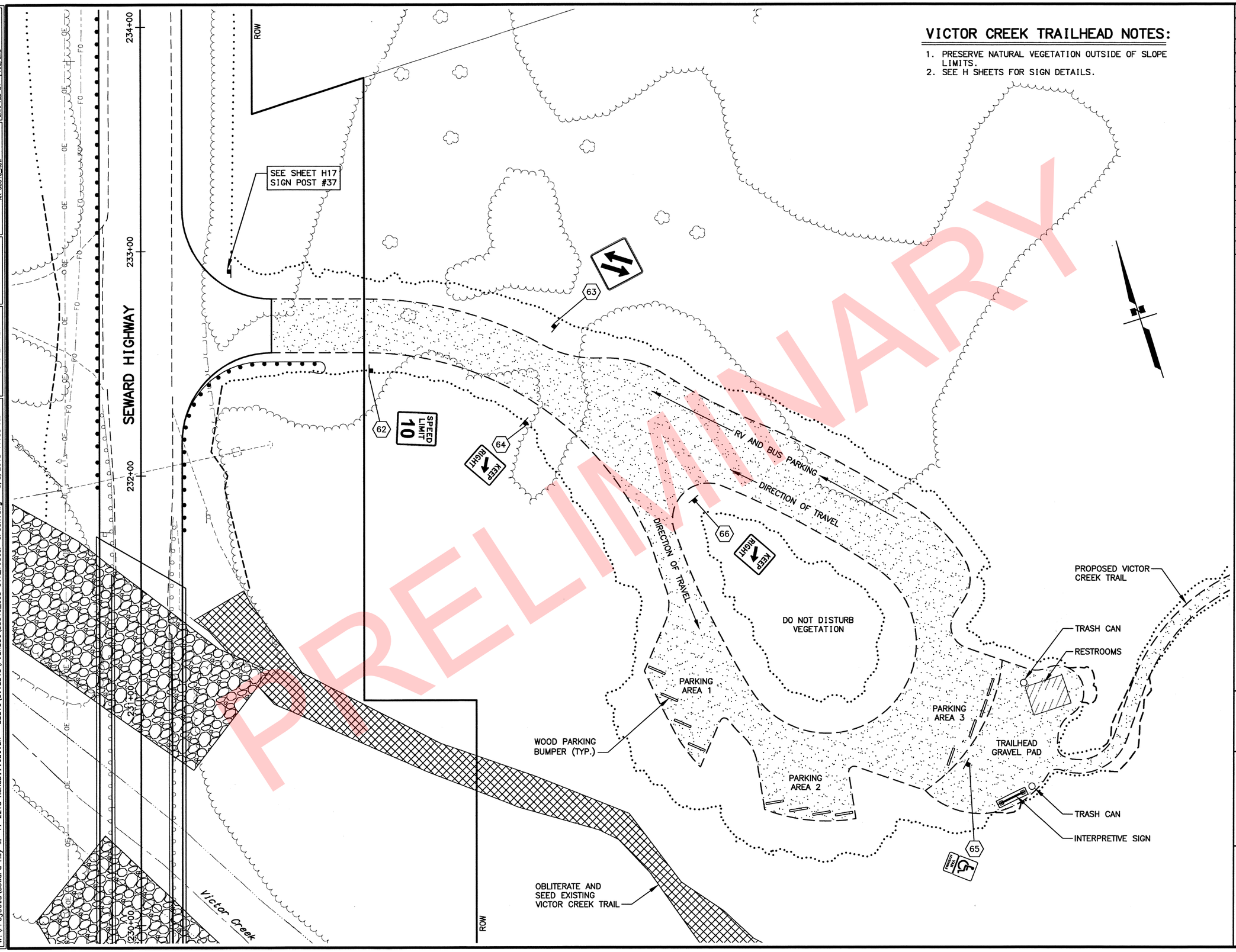

VICTOR CREEK TRAILHEAD NOTES:

1. PRESERVE NATURAL VEGETATION OUTSIDE OF SLOPE LIMITS.
2. SEE H SHEETS FOR SIGN DETAILS.

PRELIMINARY

SHEET NO.	TOTAL SHEETS
G9	G17
STATE	YEAR
ALASKA	2019

PROJECT DESIGNATION

311032/Z536100000

ADDENDUM NO.

ATTACHMENT NO.

REVISIONS

NO.	DATE	DESCRIPTION

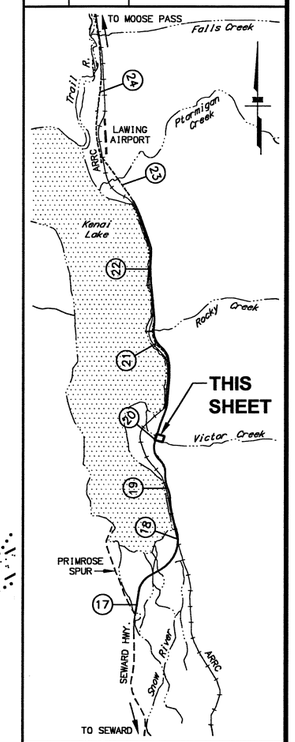

PLANS DEVELOPED BY:
STATE OF ALASKA
DEPARTMENT OF TRANSPORTATION
AND PUBLIC FACILITIES
4111 AVIATION AVENUE
ANCHORAGE, AK 99502
(907) 269-0590

STATE OF ALASKA
KRISTEN L. MEIER
CE 11132
REGISTERED PROFESSIONAL ENGINEER

PS&E REVIEW

STATE OF ALASKA
DEPARTMENT OF TRANSPORTATION
AND PUBLIC FACILITIES

SEWARD HIGHWAY
MP 17-22.5
REHABILITATION

VICTOR CREEK TRAILHEAD
SITE PLAN

DRAWING LOCATION
W:\Projects\Seward Hwy MP 17-22.5 Rehabilitation - 53610\Civ3D16\Planset\53610_G09-G17_Victor Creek.dwg

DATE TIME 3/8/2018 11:33 AM

LAYOUT G9 OVERVIEW

SCALE 1" = 20'

XREFS: XR-53610-Border_PandP XR-53610_Design, XR-53610_Base XR-53610_ROW

DESIGNED BY CML\KDS\ZDK
CHECKED BY KEK
DRAFTED BY VJS/BMS

DATE	TIME	LAYOUT	SCALE	XREFS: XR-53610-Border_PondP, XR-53610_Plan Lgn, XR-53610_Base, XR-53610_ROW	DESIGNED BY KGS/ZDK	CHECKED BY KBK	DRAFTED BY ZDK/VJS
3/8/2018	10:04 AM	G08 KNIFE SHOP	1" = 10'				

DRAWING LOCATION
W:\Projects\Seward Hwy MP 17-22.5 Rehabilitation - 53610\Civ3D16\Planset\53610_G08_Knife Shop.dwg

PARKING GRADING TABLE

POINT	DESC.	STATION	OFFSET	ELEV.
P1	PC	45.29' LT	0+35.28	473.50
P2	POC	22.55' LT	0+38.47	473.34
P3	POC	12.00' LT	0+58.87	473.16
P4	POC	19.32' LT	0+76.55	472.69
P5	POC	37.00' LT	0+83.87	471.43
P6	POC	46.81' LT	0+81.87	471.23
P7	PT	55.04' LT	0+76.18	471.02
P8	PT	58.11' LT	0+68.79	470.90
P9	PT	81.20' LT	0+78.38	471.39
P10	PT	104.28' LT	0+87.97	471.64
P11	PT	101.98' LT	0+93.51	471.73
P12	PT	75.24' LT	0+82.41	471.44
P13	PT	70.36' LT	0+94.16	471.63
P14	PT	66.25' LT	1+04.06	471.79
P15	PT	62.11' LT	1+14.02	471.95
P16	PT	73.75' LT	1+27.71	472.23
P17	PT	62.15' LT	1+37.60	473.22
P18	PT	50.51' LT	1+23.87	472.03
P19	PC	37.00' LT	1+23.87	471.83
P20	POC	17.86' LT	1+29.73	473.36
P21	PT	12.00' LT	1+43.87	474.03
P22	PT	12.00' LT	1+55.00	474.14

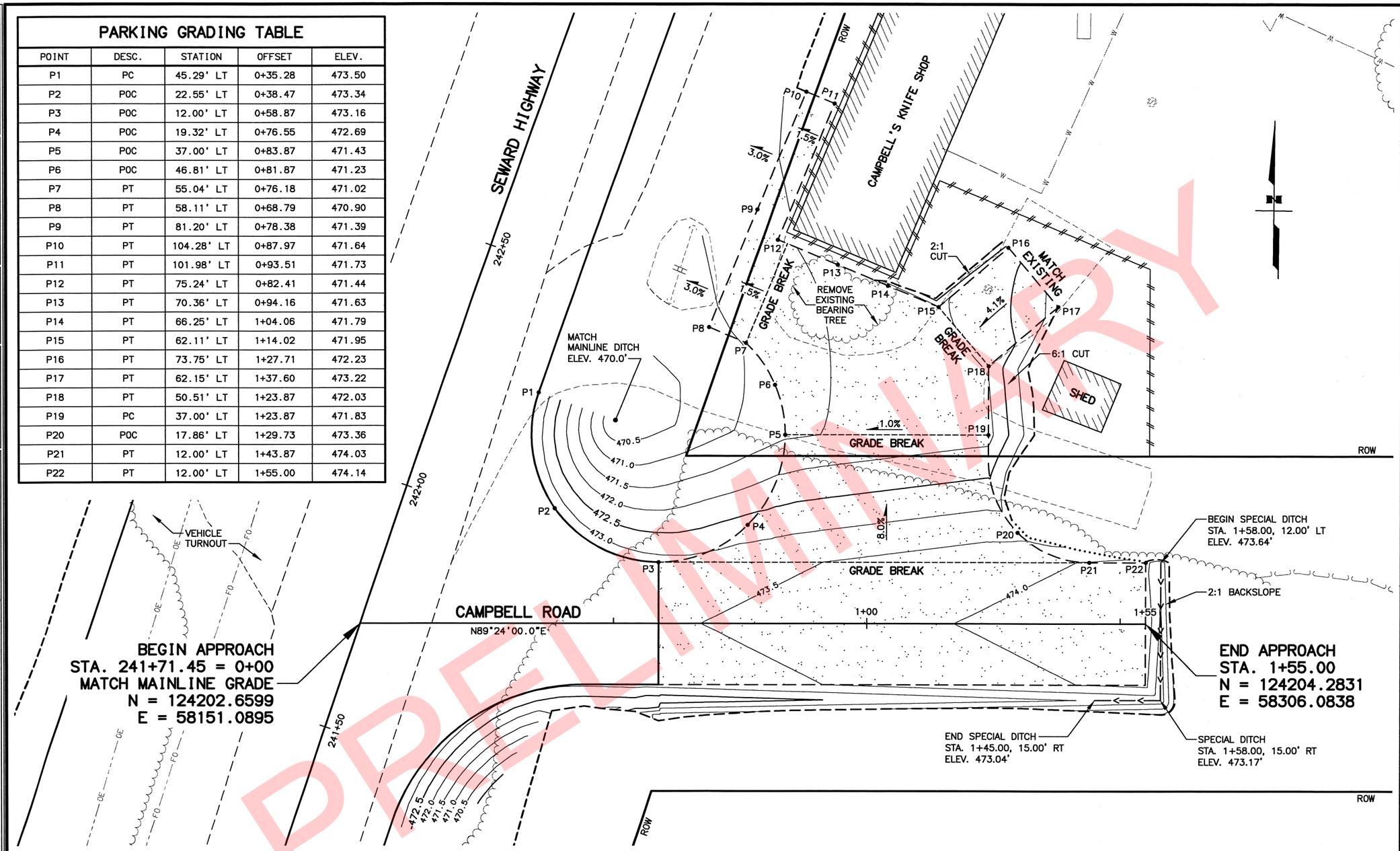

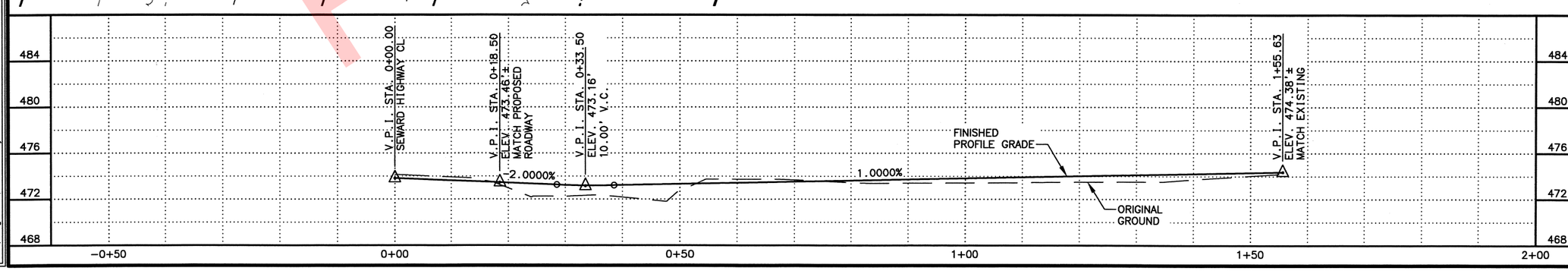

SHEET NO.	TOTAL SHEETS
G8	G17
STATE	YEAR
ALASKA	2019

PROJECT DESIGNATION
311032/Z536100000

ADDENDUM NO.

ATTACHMENT NO.

REVISIONS

NO.	DATE	DESCRIPTION

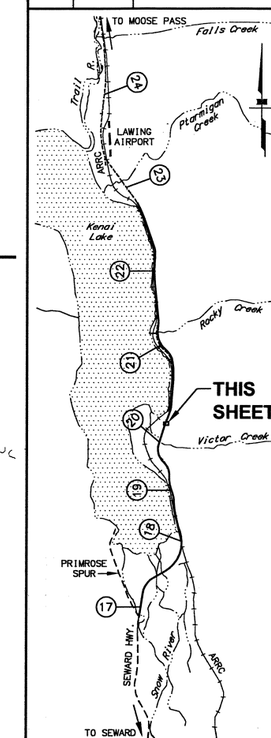

PLANS DEVELOPED BY:
STATE OF ALASKA
DEPARTMENT OF TRANSPORTATION
AND PUBLIC FACILITIES
4111 AVIATION AVENUE
ANCHORAGE, AK 99502
(907) 269-0590

STATE OF ALASKA
DEPARTMENT OF TRANSPORTATION
AND PUBLIC FACILITIES

SEWARD HIGHWAY
MP 17-22.5
REHABILITATION

KNIFE SHOP
GRADING PLAN

PRELIMINARY
P&E REVIEW

REVISIONS		
NO.	DATE	DESCRIPTION

STATE	PROJECT DESIGNATION	YEAR	SHEET NO.	TOTAL SHEETS
ALASKA	311032/Z536100000	2019	G10	G17

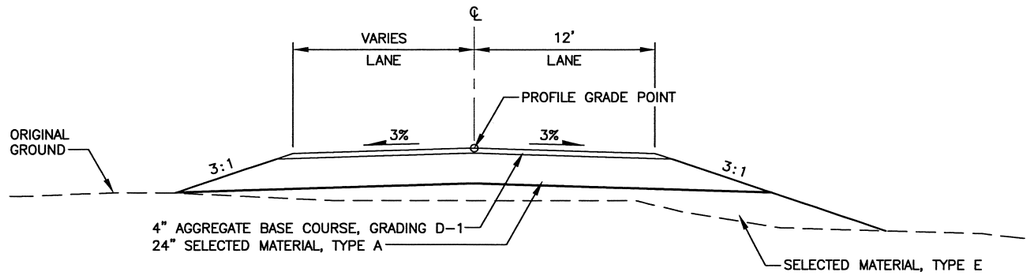

VICTOR CREEK TRAILHEAD

STA. 0+58.50 TO STA. 2+00.00

NOTE: STA. 0+18.50 TO STA. 0+58.50 USE PAVED APPROACH APRON TYPICAL SECTION

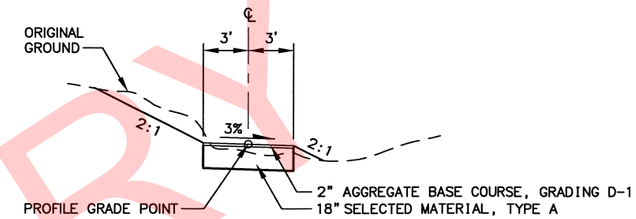

VICTOR CREEK TRAIL

STA. 0+20 TO STA. 3+06

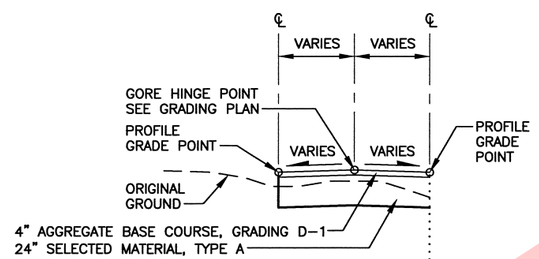

GORE

SEE GRADING PLAN

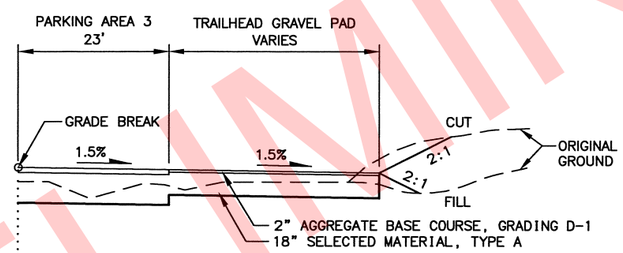

PARKING AREA 3 AND GRAVEL PAD

SEE GRADING PLAN

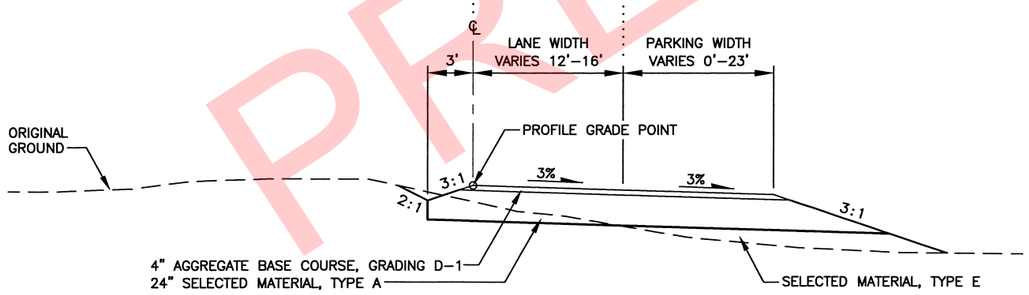

VICTOR CREEK TRAILHEAD AND PARKING

STA. 2+00.00 TO STA. 6+55.61

PRELIMINARY

STATE OF ALASKA DOT&PF
4111 AVIATION AVENUE
ANCHORAGE, AK 99502
(907) 269-0590

STATE OF ALASKA
DEPARTMENT OF TRANSPORTATION
AND PUBLIC FACILITIES

SEWARD HIGHWAY
MP 17-22.5 REHABILITATION

VICTOR CREEK TRAILHEAD
TYPICALS

DRAWING LOCATION
W:\Projects\Seward Hwy MP 17-22.5 Rehabilitation - 53610\Civ3D16\Planset\53610_G09-G17_Victor Creek.dwg

DATE TIME: 3/8/2018 11:45 AM

LAYOUT: G10 TYPICALS

SCALE: 1"=5'

XREFS: XR-53610-Border-Detail | XR-53610_Design_ XR-53610_Base | XR-53610_ROW

DESIGNED BY: CWLVGS
CHECKED BY: KEK
DRAFTED BY: ZDKVJS

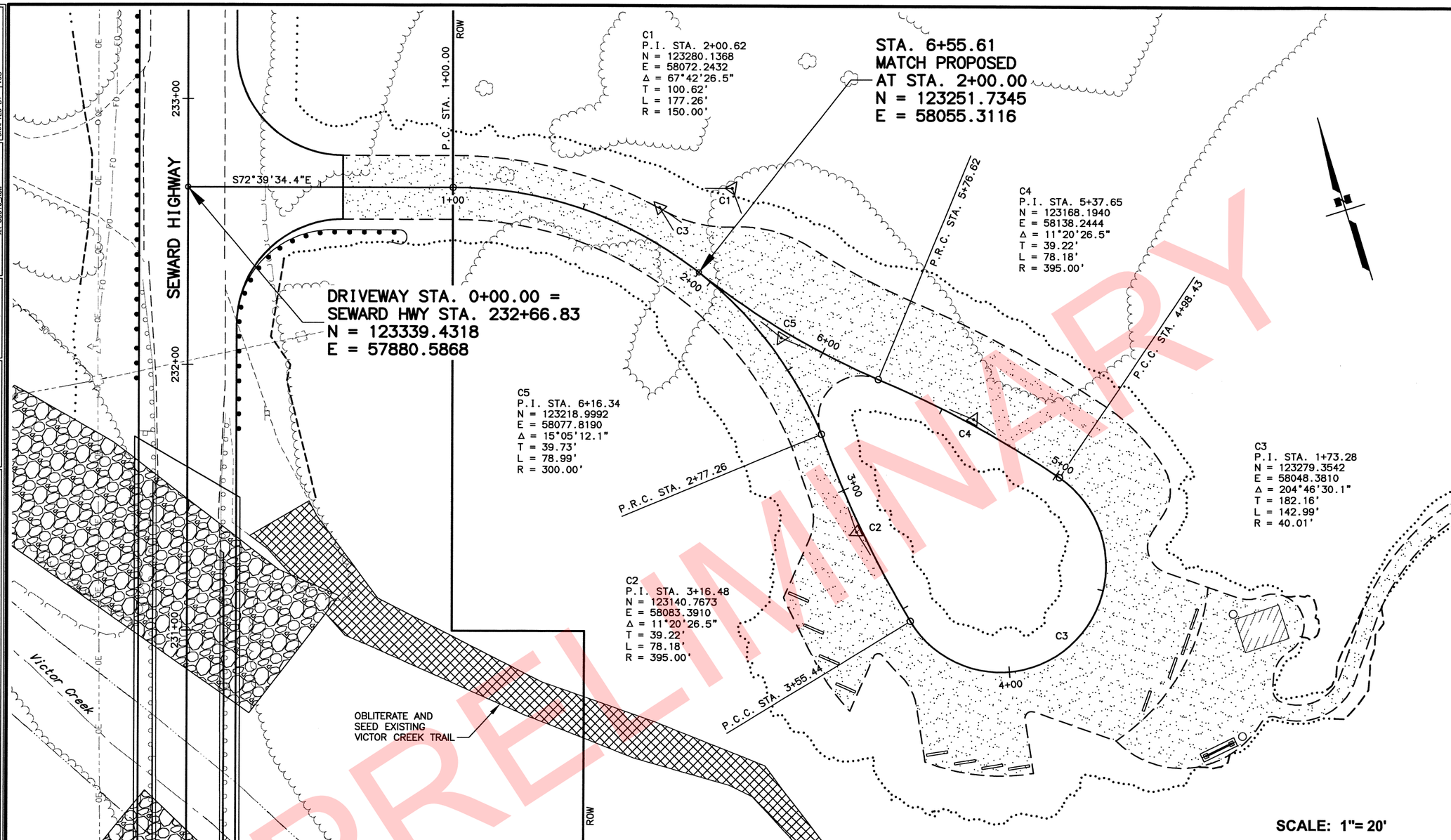

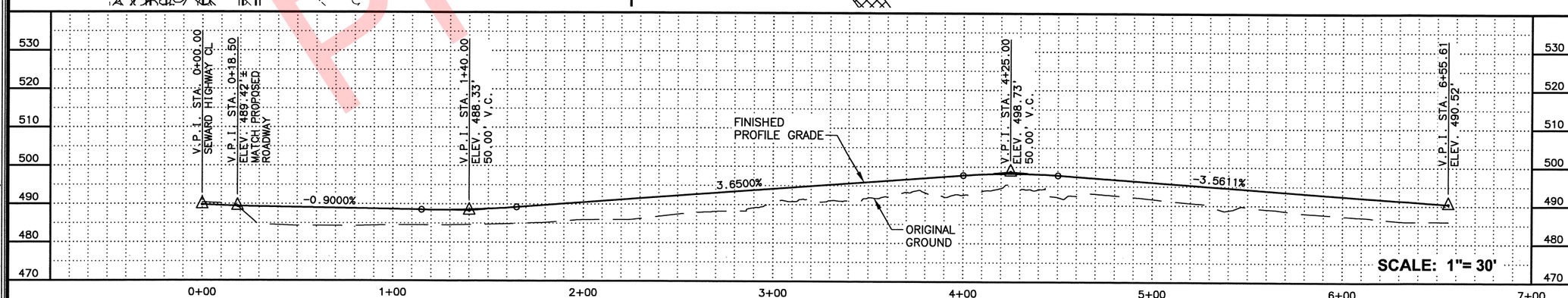

PRELIMINARY

SHEET NO.	TOTAL SHEETS
G11	G17
STATE	YEAR
ALASKA	2019

PROJECT DESIGNATION
311032/Z536100000

ADDENDUM NO.

ATTACHMENT NO.

REVISIONS

NO.	DATE	DESCRIPTION

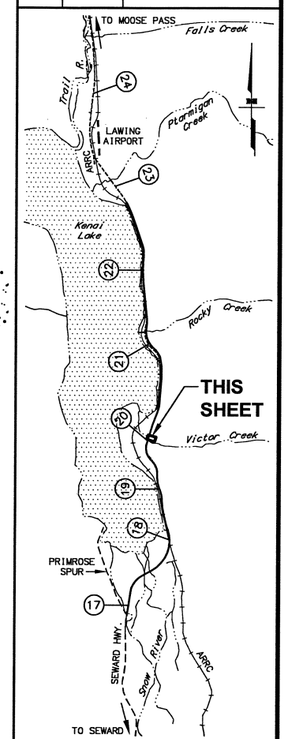

PLANS DEVELOPED BY:
STATE OF ALASKA
DEPARTMENT OF TRANSPORTATION
AND PUBLIC FACILITIES
4111 AVIATION AVENUE
ANCHORAGE, AK 99502
(907) 269-0590

STATE OF ALASKA
KRISTEN LEIBER
PE 132
PROFESSIONAL ENGINEER
PS&E REVIEW

STATE OF ALASKA
DEPARTMENT OF TRANSPORTATION
AND PUBLIC FACILITIES

SEWARD HIGHWAY
MP 17-22.5
REHABILITATION

VICTOR CREEK TRAILHEAD
PLAN AND PROFILE

DRAWING LOCATION
W:\Projects\Seward Hwy MP 17-22.5 Rehabilitation - 53610\Civ3D16\Planset\53610_G09-G17_Victor Creek.dwg

DATE	TIME	LAYOUT	SCALE
3/8/2018	11:45 AM	G11 P&P	1"=20' / 1"=30

XREFS: XR-53610_BR-dwr_Pandr
XR-53610_Part13_JP-dwg
XR-53610_Base
XR-53610_ROW

DESIGNED BY	CML VDS VZK
CHECKED BY	CML
DRAFTED BY	VJS

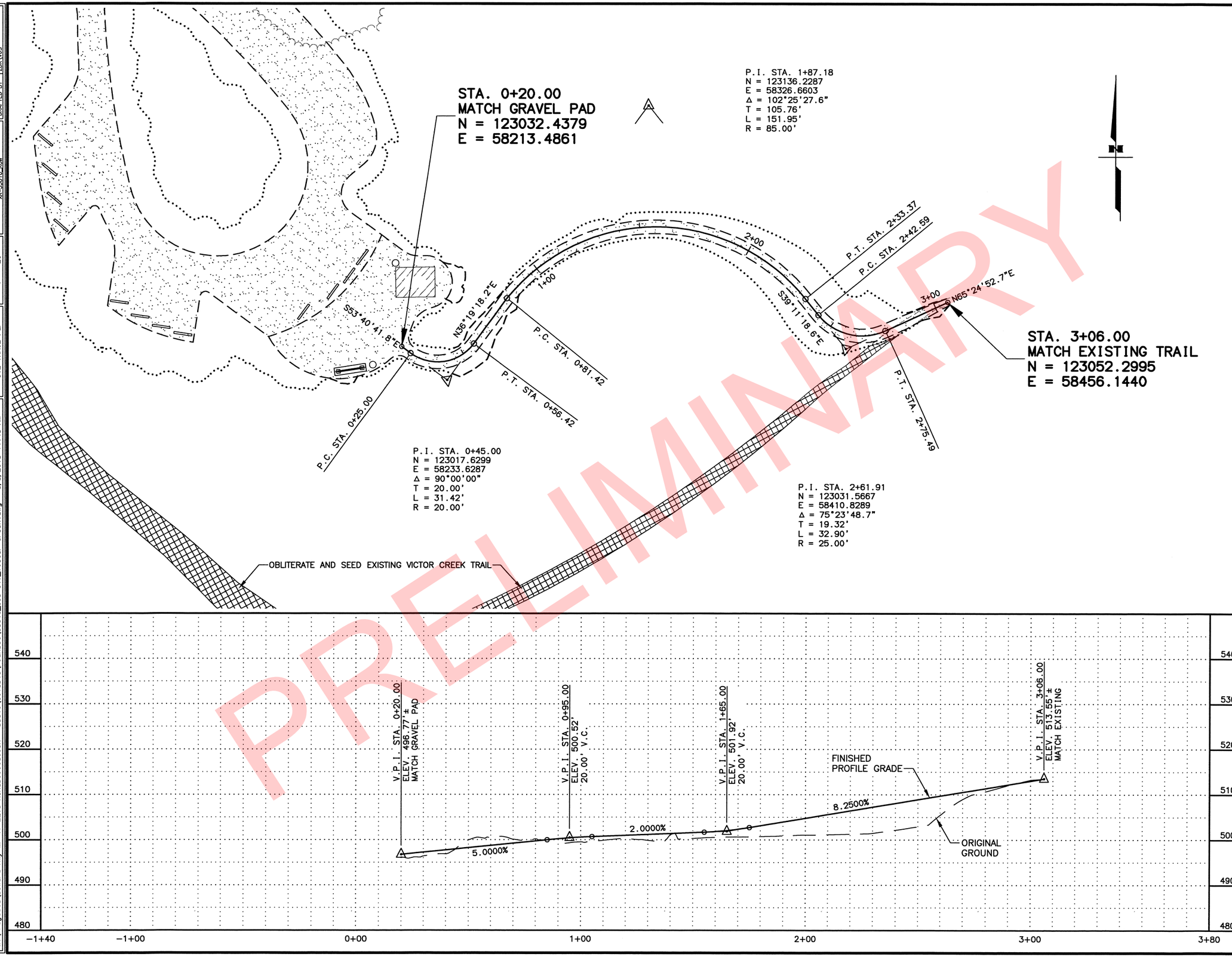

SHEET NO.	TOTAL SHEETS
G12	G17
STATE	YEAR
ALASKA	2019

PROJECT DESIGNATION

311032/Z536100000

ADDENDUM NO.

ATTACHMENT NO.

REVISIONS

NO.	DATE	DESCRIPTION

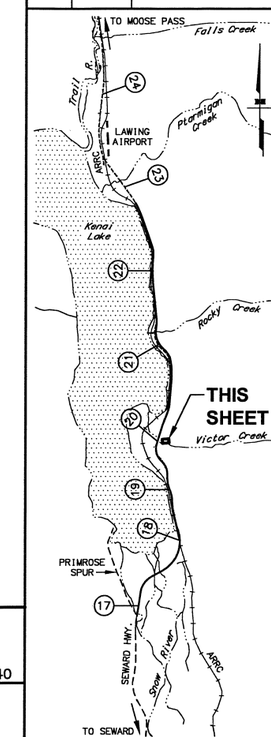

PLANS DEVELOPED BY:
STATE OF ALASKA
DEPARTMENT OF TRANSPORTATION
AND PUBLIC FACILITIES
4111 AVIATION AVENUE
ANCHORAGE, AK 99502
(907) 269-0590

STATE OF ALASKA
DEPARTMENT OF TRANSPORTATION
AND PUBLIC FACILITIES

SEWARD HIGHWAY
MP 17-22.5
REHABILITATION

VICTOR CREEK TRAILHEAD
TRAIL PLAN & PROFILE

DATE	TIME	LAYOUT	SCALE
3/8/2018	11:45 AM	G12 TRAIL P&P	1" = 20'

XREFS: XR-53610-Border, PondP
XR-53610_Design, XR-53610_Base
XR-53610_ROW

DESIGNED BY	KDS/ZDK
CHECKED BY	KEK
DRAFTED BY	ZDK\VJS

DRAWING LOCATION
W:\Projects\Seward Hwy MP 17-22.5 Rehabilitation - 53610\Civ3D16\Planset\53610_G09-G17_Victor Creek.dwg

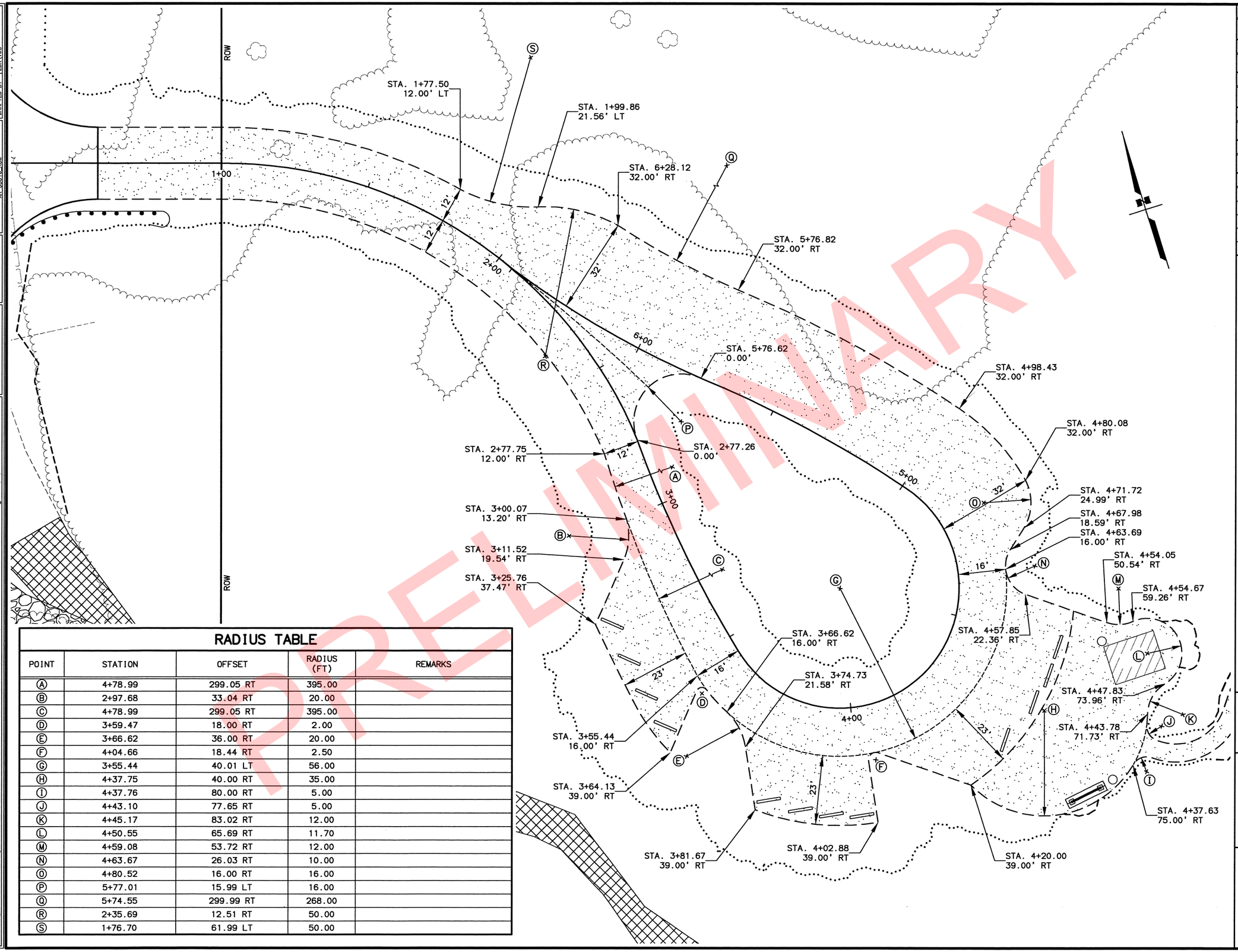

RADIUS TABLE

POINT	STATION	OFFSET	RADIUS (FT)	REMARKS
A	4+78.99	299.05 RT	395.00	
B	2+97.68	33.04 RT	20.00	
C	4+78.99	299.05 RT	395.00	
D	3+59.47	18.00 RT	2.00	
E	3+66.62	36.00 RT	20.00	
F	4+04.66	18.44 RT	2.50	
G	3+55.44	40.01 LT	56.00	
H	4+37.75	40.00 RT	35.00	
I	4+37.76	80.00 RT	5.00	
J	4+43.10	77.65 RT	5.00	
K	4+45.17	83.02 RT	12.00	
L	4+50.55	65.69 RT	11.70	
M	4+59.08	53.72 RT	12.00	
N	4+63.67	26.03 RT	10.00	
O	4+80.52	16.00 RT	16.00	
P	5+77.01	15.99 LT	16.00	
Q	5+74.55	299.99 RT	268.00	
R	2+35.69	12.51 RT	50.00	
S	1+76.70	61.99 LT	50.00	

SHEET NO.	TOTAL SHEETS
G13	G17
STATE	YEAR
ALASKA	2019

PROJECT DESIGNATION

311032/Z536100000

ADDENDUM NO.

ATTACHMENT NO.

REVISIONS

NO.	DATE	DESCRIPTION

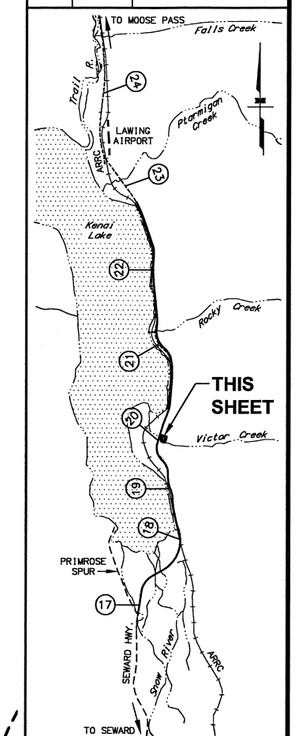

PLANS DEVELOPED BY:
STATE OF ALASKA
DEPARTMENT OF TRANSPORTATION
AND PUBLIC FACILITIES
4111 AVIATION AVENUE
ANCHORAGE, AK 99502
(907) 269-0590

STATE OF ALASKA
PS&E REVIEW
KRISTEN L. REIMER
CE 13132
REGISTERED PROFESSIONAL ENGINEER

STATE OF ALASKA
DEPARTMENT OF TRANSPORTATION
AND PUBLIC FACILITIES

SEWARD HIGHWAY
MP 17-22.5
REHABILITATION

VICTOR CREEK TRAILHEAD
LAYOUT PLAN

DRAWING LOCATION
W:\Projects\Seward Hwy MP 17-22.5 Rehabilitation - 53610\Civ3D16\Planset\53610_G09-G17_Victor Creek.dwg

DATE TIME
3/8/2018 11:45 AM

LAYOUT
G13 LAYOUT

SCALE
1" = 15'

XREFS: XR-53610-Border_PandP
XR-53610_Design, XR-53610_Base
XR-53610_ROW

DESIGNED BY CML\KDS\ZDK
CHECKED BY KEK
DRAFTED BY ZDK\VJS

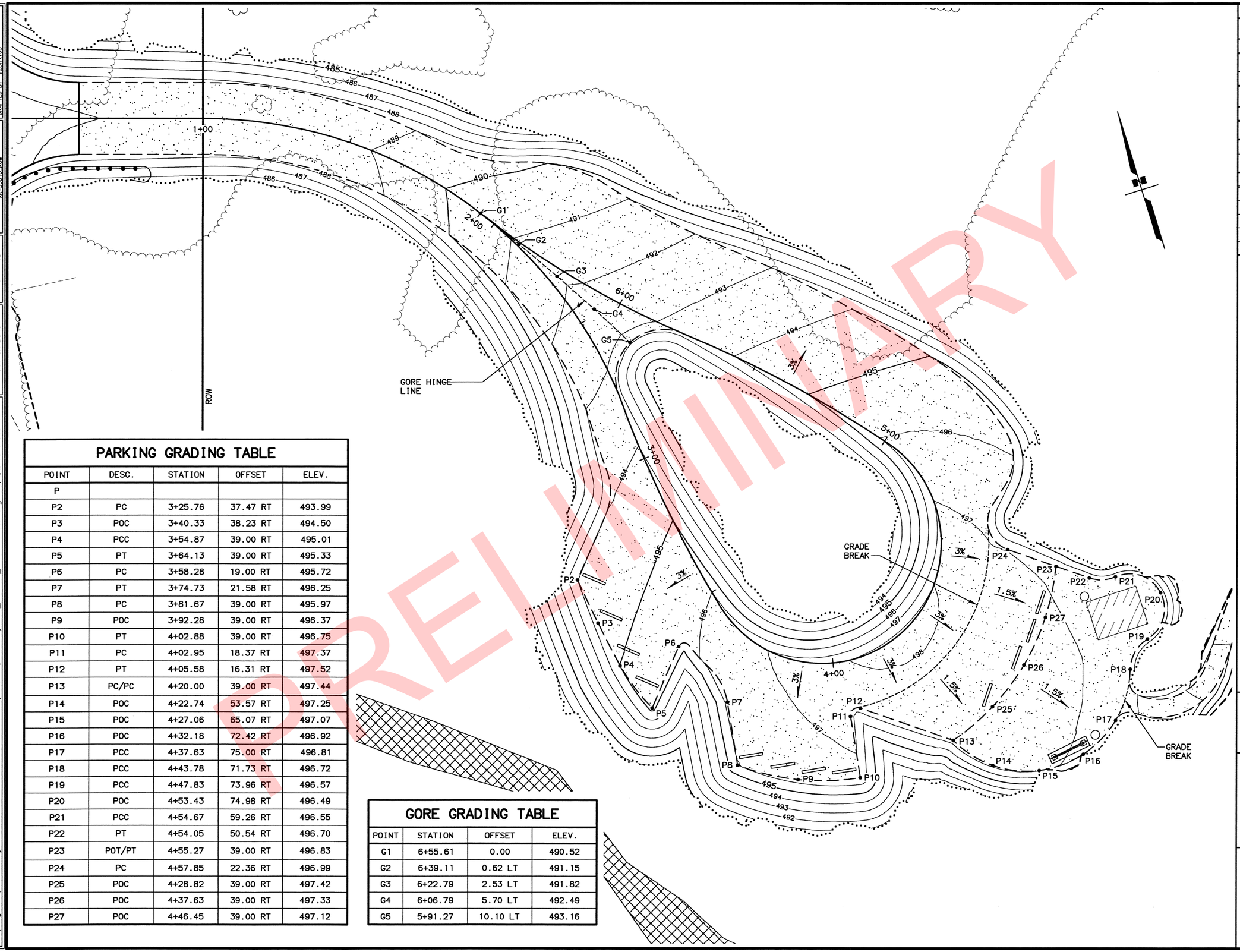

PARKING GRADING TABLE

POINT	DESC.	STATION	OFFSET	ELEV.
P				
P2	PC	3+25.76	37.47 RT	493.99
P3	POC	3+40.33	38.23 RT	494.50
P4	PCC	3+54.87	39.00 RT	495.01
P5	PT	3+64.13	39.00 RT	495.33
P6	PC	3+58.28	19.00 RT	495.72
P7	PT	3+74.73	21.58 RT	496.25
P8	PC	3+81.67	39.00 RT	495.97
P9	POC	3+92.28	39.00 RT	496.37
P10	PT	4+02.88	39.00 RT	496.75
P11	PC	4+02.95	18.37 RT	497.37
P12	PT	4+05.58	16.31 RT	497.52
P13	PC/PC	4+20.00	39.00 RT	497.44
P14	POC	4+22.74	53.57 RT	497.25
P15	POC	4+27.06	65.07 RT	497.07
P16	POC	4+32.18	72.42 RT	496.92
P17	PCC	4+37.63	75.00 RT	496.81
P18	PCC	4+43.78	71.73 RT	496.72
P19	PCC	4+47.83	73.96 RT	496.57
P20	POC	4+53.43	74.98 RT	496.49
P21	PCC	4+54.67	59.26 RT	496.55
P22	PT	4+54.05	50.54 RT	496.70
P23	POT/PT	4+55.27	39.00 RT	496.83
P24	PC	4+57.85	22.36 RT	496.99
P25	POC	4+28.82	39.00 RT	497.42
P26	POC	4+37.63	39.00 RT	497.33
P27	POC	4+46.45	39.00 RT	497.12

GORE GRADING TABLE

POINT	STATION	OFFSET	ELEV.
G1	6+55.61	0.00	490.52
G2	6+39.11	0.62 LT	491.15
G3	6+22.79	2.53 LT	491.82
G4	6+06.79	5.70 LT	492.49
G5	5+91.27	10.10 LT	493.16

PRELIMINARY

SHEET NO.	TOTAL SHEETS
G14	G17
STATE	YEAR
ALASKA	2019

PROJECT DESIGNATION

311032/Z536100000

ADDENDUM NO.

ATTACHMENT NO.

REVISIONS

NO.	DATE	DESCRIPTION

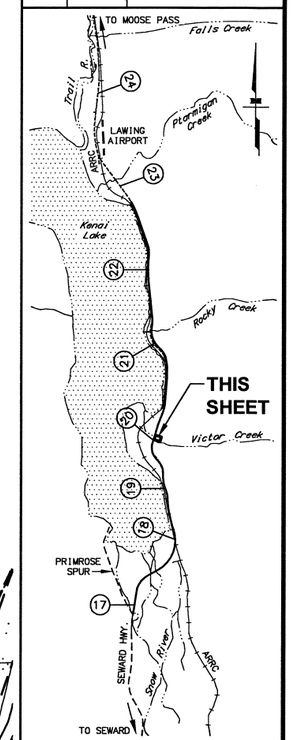

PLANS DEVELOPED BY:
STATE OF ALASKA
DEPARTMENT OF TRANSPORTATION
AND PUBLIC FACILITIES
4111 AVIATION AVENUE
ANCHORAGE, AK 99502
(907) 269-0590

STATE OF ALASKA
KRISTIN M. TOMAS
PROFESSIONAL ENGINEER
PSE REVIEW

STATE OF ALASKA
DEPARTMENT OF TRANSPORTATION
AND PUBLIC FACILITIES

SEWARD HIGHWAY
MP 17-22.5
REHABILITATION

VICTOR CREEK TRAILHEAD
GRADING PLAN

DRAWING LOCATION
W:\Projects\Seward Hwy MP 17-22.5 Rehabilitation - 53610\Civ3D16\Planset\53610_G09-G17_Victor Creek.dwg

DATE	TIME	LAYOUT	SCALE	XREFS: XR-53610-Border-PondP XR-53610_Design_XR-53610_Base XR-53610_ROW	DESIGNED BY	OML\KGS\ZDK
3/8/2018	11:45 AM	G14 GRADING	1" = 15'		CHECKED BY	KEK
					DRAFTED BY	ZDK\VJS

REVISIONS		
NO.	DATE	DESCRIPTION

STATE	PROJECT DESIGNATION	YEAR	SHEET NO.	TOTAL SHEETS
ALASKA	311032/Z536100000	2019	G15	G17

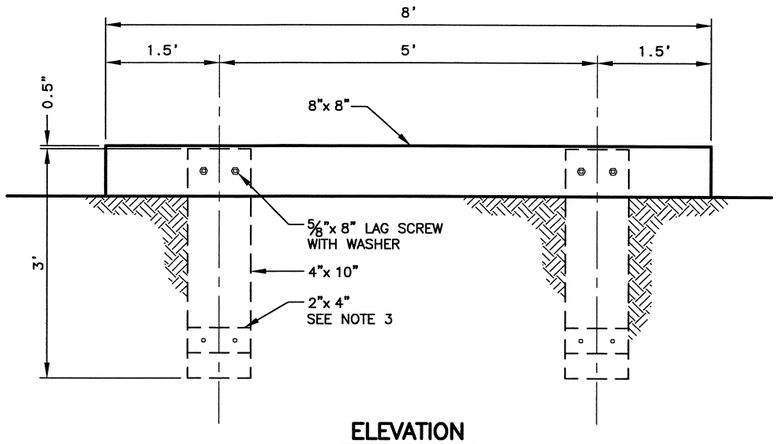

ELEVATION

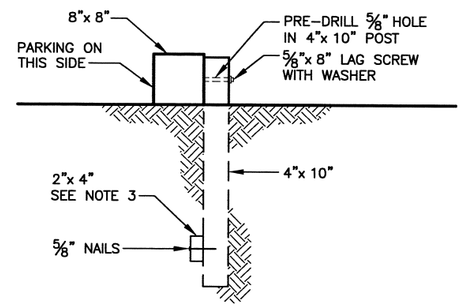

SECTION

WOOD PARKING BUMPER

WOOD PARKING BUMPER TABLE

BUMPER	BUMPER RIGHT		BUMPER LEFT		REMARKS
	STATION	OFFSET	STATION	OFFSET	
1	3+25.82	34.65 RT	3+30.56	29.60 RT	PARKING AREA 1
2	3+37.02	35.25 RT	3+42.89	30.40 RT	PARKING AREA 1
3	3+48.89	35.84 RT	3+54.89	31.19 RT	PARKING AREA 1
4	3+58.15	36.06 RT	3+61.95	32.24 RT	PARKING AREA 1
5	3+81.38	36.05 RT	3+85.20	32.32 RT	PARKING AREA 2
6	3+87.24	36.00 RT	3+91.29	33.36 RT	PARKING AREA 2
7	3+92.79	36.01 RT	3+96.96	34.46 RT	PARKING AREA 2
8	3+98.14	36.02 RT	4+02.36	35.54 RT	PARKING AREA 2
9	4+27.65	36.39 RT	4+31.58	33.22 RT	PARKING AREA 3
10	4+35.99	36.07 RT	4+40.16	34.52 RT	PARKING AREA 3
11	4+41.33	35.94 RT	4+45.55	35.45 RT	PARKING AREA 3
12	4+46.61	35.38 RT	4+50.83	35.95 RT	PARKING AREA 3

* BUMPER NUMBERS INCREASE COUNTER CLOCKWISE AROUND PARKING AREAS.

PLACE HOLDER

TRASH CAN

WOOD PARKING BUMBER NOTES:

1. PRESERVATIVE TREATMENT. PRESERVATIVE TREAT ALL WOOD MATERIALS PER AMERICAN WOOD PRESERVER'S ASSOCIATION (AWPA) STANDARD U1 WITH PENTA IN LIGHT SOLVENTS OR WATERBORNE PRESERVATIVES AS REQUIRED FOR GROUND CONTACT AND FRESH WATER USE, COLOR LIGHT BROWN/TAN (UC4A). MARK PRESERVATIVE TREATED MATERIALS BY AN APPROVED INSPECTION AGENCY CERTIFIED TO INSPECT PRESERVATIVE-TREATED WOOD INDICATING COMPLIANCE WITH THE TREATING, DRYING, RETENTION AND PENETRATION REQUIREMENTS OF APPLICABLE AWPA STANDARDS OR EQUIVALENT CODE APPROVED PRESERVATIVE-TREATING AND QUALITY CONTROL REQUIREMENTS. FIELD TREAT CUTS PER AWPA M4.

2. FASTENERS AND FRAMING HARDWARE. HOT DIP GALVANIZE ALL STEEL, INCLUDING NAILS, SCREWS, AND WASHERS PER ASTM A123, A153, AND A653. REPAIR DAMAGED GALVANIZING PER ASTM A780.

3. ALL POSTS WILL BE SET PLUMB INTO HAND DUG OR AUGERED HOLES, OR DRIVEN PLUMB. DELETE 2x4 ON DRIVEN POSTS.

PRELIMINARY

STATE OF ALASKA
KRISTIN L. FIELDER
CE 32
REGISTERED PROFESSIONAL ENGINEER

P&E REVIEW

STATE OF ALASKA DOT&PF
4111 AVIATION AVENUE
ANCHORAGE, AK 99502
(907) 269-0590

STATE OF ALASKA
DEPARTMENT OF TRANSPORTATION
AND PUBLIC FACILITIES

SEWARD HIGHWAY
MP 17-22.5 REHABILITATION

VICTOR CREEK TRAILHEAD
DETAILS

DESIGNED BY	CML/KDS
CHECKED BY	KEK
DRAFTED BY	VJS

XREFS: XR-53610-Border-Detail

SCALE 1"=1'

LAYOUT G15 DETAILS

DATE TIME 3/8/2018 11:45 AM

DRAWING LOCATION W:\Projects\Seward Hwy MP 17-22.5 Rehabilitation - 53610\Civ3D16\Planset\53610_G09-G17_Victor Creek.dwg

REVISIONS		
NO.	DATE	DESCRIPTION

STATE	PROJECT DESIGNATION	YEAR	SHEET NO.	TOTAL SHEETS
ALASKA	311032/Z536100000	2019	G16	G17

PLACE HOLDER

PRELIMINARY

PS&E REVIEW

STATE OF ALASKA DOT&PF
4111 AVIATION AVENUE
ANCHORAGE, AK 99502
(907) 269-0590

STATE OF ALASKA
DEPARTMENT OF TRANSPORTATION
AND PUBLIC FACILITIES

SEWARD HIGHWAY
MP 17-22.5 REHABILITATION

VICTOR CREEK TRAILHEAD
INTERPRETIVE SIGN DETAILS

DRAWING LOCATION	DATE TIME	LAYOUT	SCALE	XREFS: XR-53610-Burden-Detail	DESIGNED BY
W:\Projects\Seward Hwy MP 17-22.5 Rehabilitation - 53610\Civ3D16\Planset\53610_G09-G17_Victor Creek.dwg	3/8/2018 11:45 AM	G16 SIGNS	1"=5'		CHECKED BY
					DRAFTED BY

REVISIONS		
NO.	DATE	DESCRIPTION

STATE	PROJECT DESIGNATION	YEAR	SHEET NO.	TOTAL SHEETS
ALASKA	311032/Z536100000	2019	G17	G17

PLACE HOLDER

PRELIMINARY

PS&E REVIEW

STATE OF ALASKA DOT&PF
4111 AVIATION AVENUE
ANCHORAGE, AK 99502
(907) 269-0590

STATE OF ALASKA
DEPARTMENT OF TRANSPORTATION
AND PUBLIC FACILITIES

SEWARD HIGHWAY
MP 17-22.5 REHABILITATION

VICTOR CREEK TRAILHEAD
VAULT TOILET DETAILS

DRAWING LOCATION	DATE TIME	LAYOUT	SCALE	XREFS: XR-53610-Border-Detail	DESIGNED BY
W:\Projects\Seward Hwy MP 17-22.5 Rehabilitation - 53610\Civ3D16\Planset\53610_G09-G17_Victor Creek.dwg	3/8/2018 11:45 AM	G17 TOILET	1"=5'		CHECKED BY
					DRAFTED BY

STATE	PROJECT DESIGNATION	YEAR	SHEET NO.	TOTAL SHEETS
ALASKA	311032/Z536100000	2018	H1	H38

REVISIONS		
NO.	DATE	DESCRIPTION

SYMBOL LEGEND

EXISTING	PROPOSED	
		LOAD CENTER
STATE MOA	STATE MOA	TRAFFIC CONTROLLER ARROW INDICATES DOOR OPENING
		BEACON CONTROLLER
##	##	TYPE 1A JUNCTION BOX
##	##	TYPE II JUNCTION BOX
##	##	TYPE III JUNCTION BOX
##	##	TYPE IV JUNCTION BOX
		ELECTROLIER
HT#	HT#	HIGHTOWER
##	##	SIGNAL POLE WITH MASTARM
		PEDESTRIAN PUSH BUTTON
		PEDESTRIAN SIGNAL
		VEHICULAR SIGNAL
		VEHICULAR SIGNAL LEFT
		VEHICULAR SIGNAL RIGHT
A	A	OPTICAL DETECTOR
GPS	GPS	GPS DETECTOR
CAM	CAM	CAMARA DETECTOR
RAD	RAD	RADAR DETECTOR
###	###	LOOP DETECTOR
		ANTENNA, YAGI OR OMNI
		MASTARM BEACON
		RURAL BEACON
		SCHOOL ZONE BEACON
		LOOP DETECTOR CONDUIT
		SIGNAL CONDUIT
		LIGHTING CONDUIT
		SIGNAL & LIGHTING CONDUIT
		CONDUIT BORING
2"	2"	CONDUIT SIZE IN INCHES
F/O #	F/O #	FIBER OPTIC VAULT
I/C	I/C	INTERCONNECT
	1	SIGN POST & NUMBER
		PRIVATE SIGN

PAVEMENT MARKING LEGEND

PROPOSED	
	PROJECT CENTERLINE
8"W	8" WHITE SOLID STRIPE
4"W	4" WHITE SOLID STRIPE
4"W SKIP	4" WHITE SKIP STRIPE 10' STRIPES AND 30' SPACES
8"W GUIDE SKIP	8" WHITE LANE GUIDE SKIP LANE CONTINUATION OR TURN SKIP 1' STRIPES AND 3' SPACES
4"W GUIDE SKIP	4" WHITE BIKE LANE GUIDE SKIP LANE CONTINUATION OR TURN SKIP 2' STRIPES AND 6' SPACES
8"Y	8" YELLOW SOLID STRIPE
4"Y	4" YELLOW SOLID STRIPE
4"Y SKIP	4" YELLOW SKIP STRIPE 10' STRIPES AND 30' SPACES
+20	STRIPING CHANGE STATION INTERVAL
24"W (TYP)	2' CROSSWALK OR STOPBAR
10'	LADDER CROSSWALK LAYOUT 2' WIDE RUNGS WITH 2' SPACES ALIGNED TO AVOID TIRE PATHS
12' (2)-4"Y 3" APART VARIES 18"Y @ 45°	TYPICAL PAINTED MEDIAN

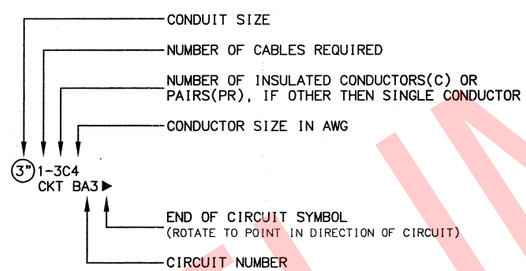

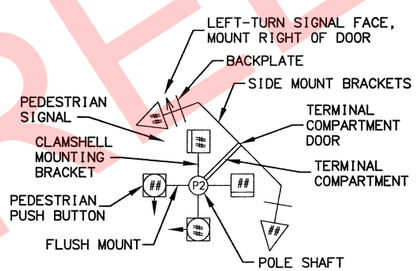

POLE SHAFT LEGEND

ABBREVIATIONS

℄ - CENTERLINE
SIG - SERVICE TO CONTROLLER
INTX - INTERSECTION
INTX L - INTERSECTION LIGHTING
LTG - LIGHTING
PRE 2 - PREEMPTION #
PRE CON 2 - PREEMPTION CONTROLLER #
LC - LOAD CENTER
TC - TRAFFIC CONTROLLER
P1 - TRAFFIC SIGNAL POLE #
PEC - PHOTOELECTRIC CELL
YAGI - DIRECTIONAL ANTENNA
OMNI - OMNI DIRECTIONAL ANTENNA
HEAD - VEHICULAR SIGNAL HEAD
PED B 28 - PEDESTRIAN PUSH BUTTON #
PEDI - PEDESTRIAN SIGNAL HEAD
RMC - RIGID METAL CONDUIT
PE - POLYETHYLENE CONDUIT
LFNC - LIQUIDTIGHT FLEXIBLE NONMETALLIC CONDUIT
AWG - AMERICAN WIRE GAUGE
NB - NORTH BOUND
EB - EAST BOUND
SB - SOUTH BOUND
WB - WEST BOUND

SIGNING & STRIPING NOTES:

1. ALL STATION LOCATIONS FOR SIGN INSTALLATION ARE APPROXIMATE. INSTALL SIGNS AT LOCATIONS AS DIRECTED BY THE ENGINEER.
2. USE THE FOLLOWING DEFINITIONS TO DECIPHER THE ABBREVIATED SIGN POST TYPES IN THE SIGN SUMMARY SHEETS.
   A. PT MEANS A PERFORATED STEEL TUBE.
   B. T MEANS A SQUARE STEEL TUBE.
   C. P MEANS A ROUND STEEL PIPE.
   D. W MEANS A WIDE FLANGE BEAM.
   E. POPL MEANS A POLE PLATE INSTALLED PER ITS STANDARD DRAWING S-23
3. FABRICATE ALL SIGNS FROM 0.125" THICK ALUMINUM SHEETING, UNLESS STATED ELSEWHERE.
4. FOR SIGNS SUPPORTED BY MULTIPLE POSTS, FABRICATE THE POSTS WITH THEIR TOPS LEVEL WITH ONE ANOTHER.
5. FOR PERFORATED STEEL TUBE SIGNPOSTS, INSTALL THE CONCRETE FOUNDATION OPTION SHOWN ON STANDARD DRAWING S-30. TRIM EACH PT POST TO LIMIT THE LENGTH INSERTED INTO THE FOUNDATION TO 12 INCHES.
6. FABRICATE GUIDE SIGNS ACCORDING TO THE SHOP DRAWINGS INCLUDED IN THE APPENDICES OF PART 4, CONTRACT PROVISIONS AND SPECIAL PROVISIONS. TRIM THE CORNERS OF ALL SIGNS TO THE RADIUS SHOWN ON EACH SHOP DRAWING.
7. ERECT NEW SIGNS BEFORE REMOVAL OF EXISTING SIGNS WITH SIMILAR MESSAGE. NOTIFY THE ENGINEER A MINIMUM OF 14 DAYS PRIOR TO BEGINNING SIGN REMOVAL AND SALVAGE OR DISPOSAL ACTIVITIES.
8. FOR SIGNS SUPPORTED BY MULTIPLE TUBES OR PIPES, LOCATE THE OUTER POSTS ON MAXIMUM SIX FEET CENTERS. INSTALL ADJACENT WIDE FLANGE POSTS ON MINIMUM EIGHT FEET CENTERS.
9. SELECTIVE AND HAND CLEARING SHALL BE PERFORMED AT THE DISCRETION OF THE ENGINEER, IN ACCORDANCE WITH SECTION 201, UPSTREAM OF ALL SIGN INSTALLATION LOCATIONS TO ACHIEVE MINIMUM SIGN VISIBILITY REQUIREMENTS. IF NOT INCLUDED AS A SEPARATE ITEM, THIS WORK SHALL BE SUBSIDIARY TO THE SIGN INSTALLATION ITEMS AND WORK.
10. FOR ALL FINAL PAVEMENT MARKINGS USE METHYLMETHACRYLATE MATERIALS. LONGITUDINAL MARKINGS SHALL BE INLAID AT 90 MILS, TRANSVERSE AND SYMBOL MARKINGS TO BE INLAID AT 90 MILS, GORE STRIPES SHALL BE SURFACE APPLIED AT 60 MILS.
11. DIMENSIONS REFER TO THE CENTER OF STRIPE AND THE EDGE OF PAVEMENT OR FACE OF CURB WHEN PRESENT.
12. IF THE NEW AND EXISTING PAVEMENT MARKINGS ARE NOT ALIGNED AT MATCH LINE, TRANSITION BETWEEN THE TWO USING A 100:1 TAPER ON THE NEW PAVEMENT.
13. WHERE NEW STRIPING IS TO EXTEND BEYOND PAVING LIMITS, REMOVE EXISTING STRIPING IN ACCORDANCE WITH SUBSECTION 670-3.04 TO THE EXTENT OF STRIPING LIMITS.

NOTES:

FOUNDATIONS NOTES:

1. STATION & C.L. REFERENCE ARE TO THE CENTER OF THE STRUCTURE, EXCEPT ON LOOPS WHICH ARE TO THE CENTER OF THE TRAILING EDGE OF THE LOOP (EDGE NEAREST INTERSECTION).
2. JUNCTION BOX LOCATIONS APPROXIMATE. LOCATE J-BOXES SO THAT THEY ARE LOCATED OUT OF THE PATHWAY, SIDEWALK, CURB RAMPS, AND DRAINAGE COLLECTION AREAS.
3. INSTALL LOAD CENTER AND TRAFFIC CONTROLLER FOUNDATIONS WITHIN 1-DEGREE OF PLUMB.
4. INSTALL ANCHOR BOLTS IN CAST FOUNDATIONS TO BE WITHIN 1:40 OF PLUMB.
5. TOPSOIL AND SEED ANY DISTURBED AREAS.

SIGNAL SYSTEM NOTES:

1. FURNISH THE SIGNAL AND LUMINAIRE MASTARM LENGTHS AND DIMENSIONS SPECIFIED ON THE POLE ELEVATIONS.
2. INSTALL DEVICES SUCH THAT THE DIMENSIONS SHOWN TO THE BOTTOM OF THE DEVICES ON THE POLE ELEVATIONS ARE MINIMUMS. VERTICAL DIMENSIONS TO SIGNAL HEADS ARE TO BOTTOM OF THE BACK PLATE.
3. INSTALL MAST ARMS PERPENDICULAR TO THE ROADWAY CENTERLINE. ACCEPTABLE VARIANCE IS +/- 1-DEGREE.
4. SALVAGE SIGNAL POLE ASSEMBLIES, SIGNS, SIGNAL FACES, AND LUMINARIES AND DELIVER TO MAINTENANCE AND OPERATIONS WITHIN 48-HOURS OF DECOMMISSIONING. COMPONENTS DAMAGED WHILE IN THE CONTRACTORS CUSTODY MUST BE REPLACED AT THE CONTRACTORS EXPENSE. REMOVE AND DISPOSE OF FOUNDATIONS.
5. SALVAGE EXISTING CONTROLLER CABINET AFTER NEW CONTROLLER CABINET IS IN SERVICE AND DELIVER TO MAINTENANCE AND OPERATIONS WITHIN 48-HOURS OF DECOMMISSIONING.
6. VEHICLE SIGNALS AND PEDESTRIAN SIGNALS SHALL BE LED MODULES.
7. REMOVE ABANDONED OR UNUSED TRAFFIC JUNCTION BOXES UNLESS OTHERWISE NOTED.
8. NEW SIGNAL HEADS THAT ARE MOUNTED BUT NOT IN OPERATION SHALL BE COVERED WITH A COMMERCIALLY AVAILABLE SIGNAL-SHIRT. EACH SIGNAL SHIRT SHALL FEATURE ELASTICIZED OPENINGS THAT FIT OVER THE VISORS AND AT LEAST TWO STRAPS TO SECURE IT TO THE SIGNAL. PROVIDE SHIRTS WITH A LEGEND THAT READS "OUT OF SERVICE" AND A CENTER SECTION THAT ALLOWS AN OPERATOR TO SEE THE INDICATIONS DURING SYSTEM TESTS.
9. SIGNAL HEADS ARE TO BE LOCATED PER FIGURE 4D-100, TYPICAL SIGNAL HEAD LOCATIONS, PER THE ALASKA TRAFFIC MANUAL. ACCEPTABLE VARIANCE IS +/- 1-FOOT.
10. AIM SIGNALS PER TABLE 660-2, THROUGH-SIGNAL AIMING POINT, OF THE SPECIAL PROVISIONS. SIGNALS SHALL ALSO BE AIMED SO AS NOT TO BE VISIBLE FROM SIDE STREET TRAFFIC. ACCEPTABLE VARIANCE IS +/- 5 DEGREES.
11. EXISTING CIRCUITS LISTED ON THE LOAD CENTER SUMMARY AND PLAN SHEETS WERE OBTAINED FROM AS-BUILT INFORMATION AND MUST BE VERIFIED BY THE CONTRACTOR PRIOR TO WORK INVOLVING THOSE CIRCUITS.

CALL BEFORE YOU DIG!

CONTRACTOR SHALL CALL A MINIMUM OF 3 DAYS IN ADVANCE OF CONSTRUCTION

ALASKA DIGLINE....907-278-3121 OR 800-478-3121

CALL OR GO TO WWW.AKONECALL.COM/STATEWIDE.HTM FOR MEMBER LIST OF WHO WILL BE NOTIFIED

STATE OF ALASKA 49TH CHRISTOPHER J. BENTZ 12821 REGISTERED PROFESSIONAL ENGINEER
PS&E REVIEW MARCH 2018

STATE OF ALASKA DOT&PF
4111 AVIATION AVENUE
ANCHORAGE, AK 99502
(907) 269-0590

STATE OF ALASKA
DEPARTMENT OF TRANSPORTATION AND PUBLIC FACILITIES

SEWARD HWY: MP17-22.5 REHABILITATION

TRAFFIC LEGEND AND NOTES

PRELIMINARY

DESIGNED BY GSB
CHECKED BY CLB
DRAFTED BY WF
XREFS CENTRAL REGION TRAFFIC DETAIL 10/13/2016
SCALE ----
LAYOUT H1
DATE TIME 3/8/2018 11:03 AM
DRAWING LOCATION W:\PROJECTS\SEWARD HWY MP 17-22.5 REHABILITATION - 53610\CIV3D16\PLANSET
DRAWING LOCATION 53610_H01_TRAFFIC_DETAIL_01.DWG

REVISIONS		
NO.	DATE	DESCRIPTION

STATE	PROJECT DESIGNATION	YEAR	SHEET NO.	TOTAL SHEETS
ALASKA	311032/Z536100000	2018	H2	H38

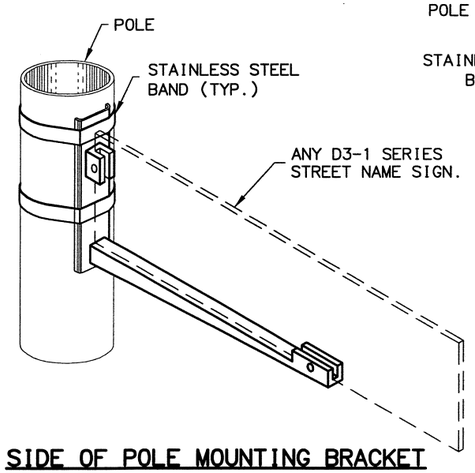

SIDE OF POLE MOUNTING BRACKET

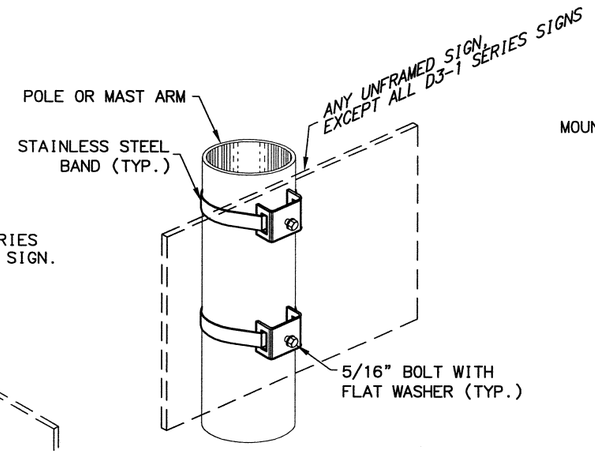

SADDLE BRACKETS

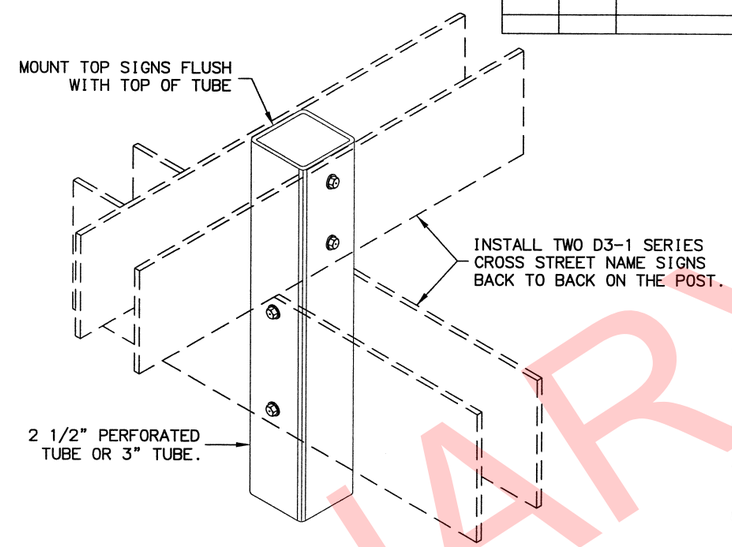

STREET NAME SIGN INSTALLATION

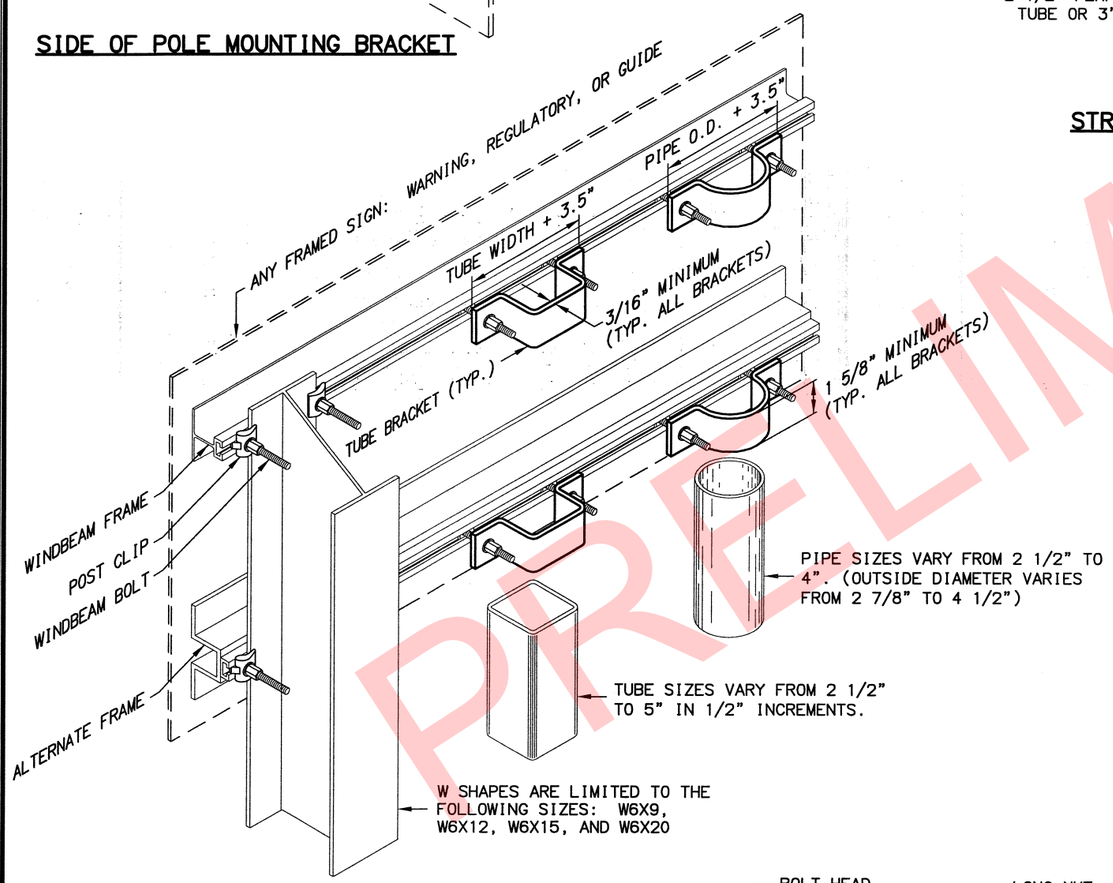

FRAMED SIGN ATTACHMENT BRACKETS

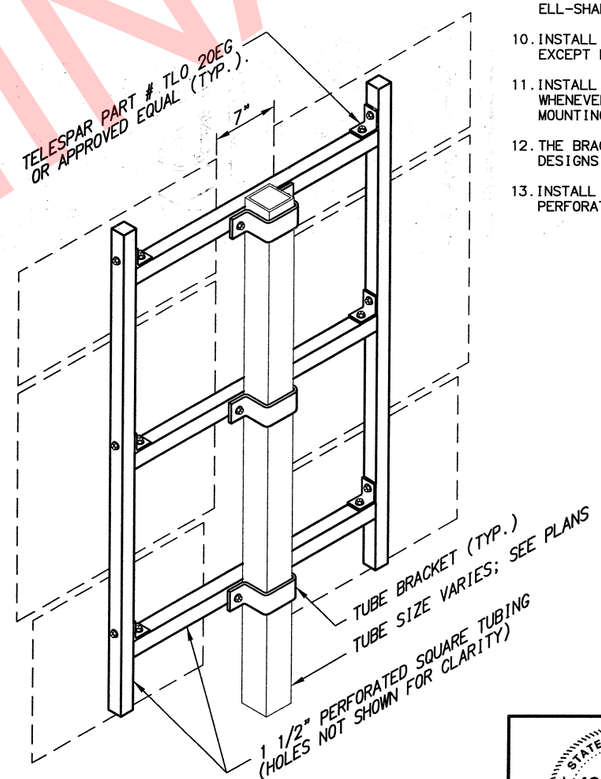

ROUTE MARKER TREE

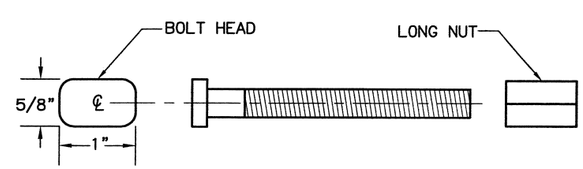

3/8" WINDBEAM BOLT AND LONG NUT

NOTES:

1. EXCEPT FOR POLES AND MAST ARMS, ONLY USE TUBES TO SUPPORT SIGNS MOUNTED ON ONE POST.
2. ATTACH SIGNS, FRAMED AND UNFRAMED TO THEIR SUPPORTS WITH ZINC PLATED 3/8" BOLTS, EXCEPT ATTACH UNFRAMED SIGNS TO PERFORATED TUBES WITH ACCESSORY DRIVE RIVETS AND TO SADDLES WITH 5/16" BOLTS.
3. BOLT UNFRAMED SIGNS DIRECTLY TO TUBES IN TWO LOCATIONS, NEAR TOP AND NEAR BOTTOM OF MATING SURFACE. ATTACH THEM TO POLES AND MAST ARMS WITH TWO SADDLES.
4. ATTACH BRACKETS TO POLES AND MAST ARMS WITH DOUBLE WRAPS OF 3/4" WIDE BY 0.020" THICK STAINLESS STEEL BANDING MATERIAL. TIGHTEN EACH BAND UNTIL IT STOPS MOVING THROUGH THE BUCKLE.
5. ATTACH FRAMED SIGNS TO POSTS WHEREVER THE FRAMES CROSS THE POSTS. AT EACH CROSSING, ATTACH THE SIGN USING TWO POST CLIPS ON W-SHAPE POSTS, A U-SHAPED BRACKET ON PIPES, AND A BRACKET WITH SQUARE CORNERS ON TUBES.
6. THE TUBE BRACKETS USED ON EVEN INCH SIZE TUBES MAY ALSO BE USED ON TUBES 1/2" SMALLER IN SIZE.
7. ONLY USE THE SPECIAL WINDBEAM BOLTS TO ATTACH SIGNS FRAMED WITH THE WINDBEAM FRAMING MATERIAL.
8. ATTACH FRAMED SIGNS TO POLES AND MAST ARMS USING POLE PLATES INSTALLED ACCORDING TO STANDARD DRAWING S-23.
9. FOR ROUTE MARKER TREES, CUT PERFORATED TUBES TO ENSURE TIGHT FITTING JOINTS. ASSEMBLE THE PIECES WITH ACCESSORY ELL-SHAPED ANGLE BRACKETS.
10. INSTALL THE TOP EDGE OF SIGNS 1" ABOVE THE TOPS OF POSTS, EXCEPT FOR THE D3-1 STREET NAME SIGNS.
11. INSTALL THE TOP EDGE OF SIGNS 3" BELOW THE TOP OF POST, WHENEVER THEY ARE MOUNTED BELOW SIGNS SECURED BY POST TOP MOUNTING BRACKETS.
12. THE BRACKET DETAILS SHOWN INDICATE GENERAL DESIGNS ONLY. DESIGNS MAY VARY BY MANUFACTURER.
13. INSTALL WEATHER TIGHT CAPS ON ALL PIPE AND TUBE POSTS, EXCEPT PERFORATED TUBING.

FASTENER SPECIFICATION TABLE			
FASTENERS		STEEL	STAINLESS STEEL
BOLTS		ASTM A 307	ASTM F 593
NUTS	REGULAR	ASTM A 563	ASTM F 594
	LOCK		
WASHERS		ASTM A 36	ASTM A 480
POST CLIPS			

PRELIMINARY

STATE OF ALASKA 49TH CHRISTOPHER J. BENTZ 12821 PROFESSIONAL ENGINEER
PS&E REVIEW MARCH 2018

STATE OF ALASKA DOT&PF
4111 AVIATION AVENUE
ANCHORAGE, AK 99502
(907) 269-0590

STATE OF ALASKA
DEPARTMENT OF TRANSPORTATION
AND PUBLIC FACILITIES

SEWARD HWY: MP17-22.5
REHABILITATION

SIGN ATTACHMENT DETAIL

DRAWING LOCATION W:\PROJECTS\SEWARD HWY MP 17-22.5 REHABILITATION - 53610\CIV3D16\PLANSET
DRAWING LOCATION 53610_H02_TRAFFIC DETAIL_33.DWG

DATE TIME 3/8/2018 11:03 AM | LAYOUT SGN ATT | SCALE ------ | XREFS CENTRAL REGION TRAFFIC DETAIL 10/31/2017 | DESIGNED BY GSB | CHECKED BY CLB | DRAFTED BY MF

REVISIONS		
NO.	DATE	DESCRIPTION

STATE	PROJECT DESIGNATION	YEAR	SHEET NO.	TOTAL SHEETS
ALASKA	311032/Z536100000	2018	H3	H38

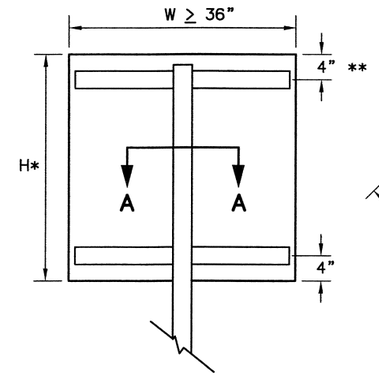

RECTANGLES AND TRAPEZOIDS

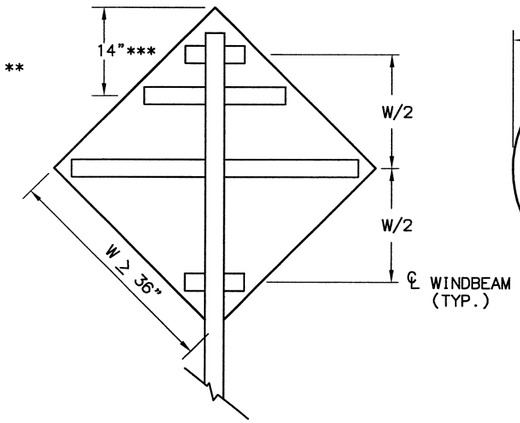

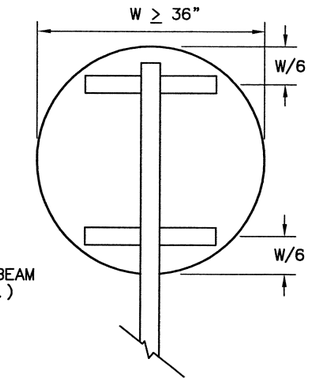

ROUNDS AND OCTAGONS

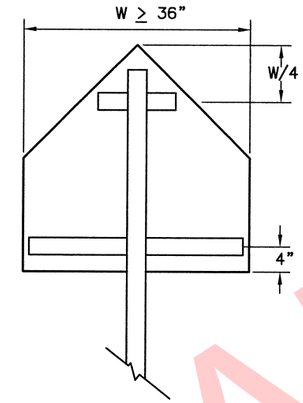

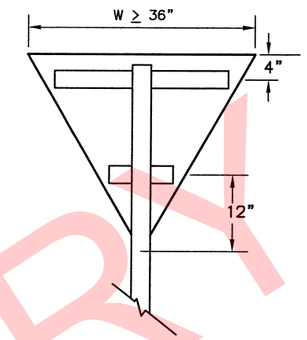

* WHEN H > 42 INCHES, INSTALL A 3RD WINDBEAM CENTERED ON THE SIGN.

** FOR S5-1 SIGNS MOUNTED ON FLASHING BEACON POSTS, USE A 10" OFFSET. OTHERWISE, USE 4".

*** FOR WARNING SIGNS MOUNTED ON FLASHING BEACON POSTS, USE THE 14" OFFSET. OTHERWISE, USE W/2.

WINDBEAM LOCATIONS FOR EACH SIGN SHAPE

ELEVATION VIEW

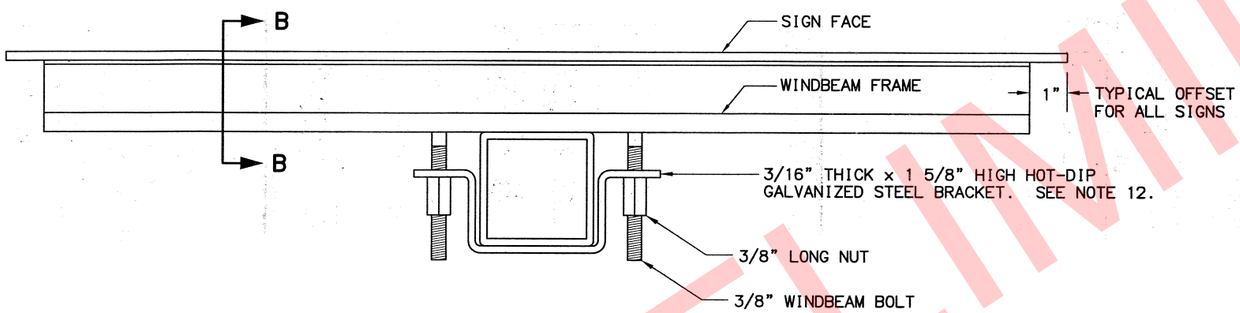

SECTION A - A TYPICAL SIGN ATTACHMENT DETAILS AT EACH WINDBEAM

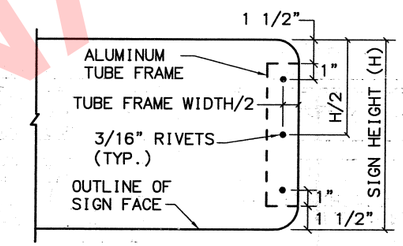

VIEW C - C

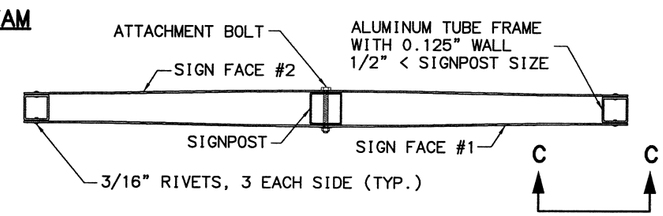

D3-1 STREET NAME SIGN FRAMING DETAIL

PLAN VIEW

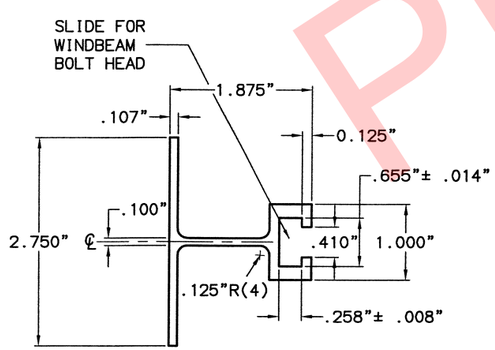

SECTION B - B WINDBEAM CROSS SECTION

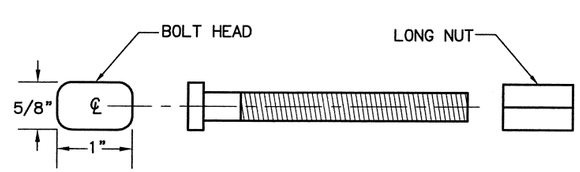

3/8" WINDBEAM BOLT AND LONG NUT

NOTES:

1. EXCEPT FOR POLES AND MAST ARMS, ONLY USE SQUARE STEEL TUBES TO SUPPORT SIGNS MOUNTED ON SINGLE POSTS.
2. INSTALL WINDBEAM OR ZEE SHAPED FRAMING MEMBERS ON DIAMOND SHAPED SIGNS 36 INCHES AND LONGER ON A SIDE AND ON OTHER SIGNS 36 INCHES WIDE AND WIDER.
3. IN HIGH WIND AREAS, THE PLANS MAY REQUIRE SIGNS SMALLER THAN THOSE LISTED IN NOTE 2 BE FRAMED AS SHOWN HERE IN.
4. THIS DRAWING DEPICTS THE WINDBEAM FRAMING AND ATTACHMENT SYSTEM. ATTACH SIGNS FRAMED WITH ZEE SHAPED FRAMING ACCORDING TO REGIONAL DRAWING "SIGN ATTACHMENT DETAILS", USING "U" SHAPED BRACKETS AND TWO BOLTS WITH NUTS.
5. THE ENGINEER MAY APPROVE OTHER FRAMING MEMBERS. SUBMIT DOCUMENTS THAT DETAIL THE FRAME'S CROSS SECTION AND STRENGTH, AND METHOD OF ATTACHING THE FRAME TO A POST.
6. USE FRAMING MEMBERS MADE FROM ALUMINUM ALLOY 6061-T6.
7. EACH FRAMING MEMBER SHALL BE ONE CONTINUOUS PIECE.
8. ATTACH FRAMING MEMBERS TO THE SIGN PANELS WITH RIVETS OR AN ENGINEER APPROVED, DOUBLE SIDED, HIGH STRENGTH, ADHESIVE TAPE.
9. WITH THE ADHESIVE TAPE, INSTALL TWO RIVETS IN BOTH ENDS OF EACH FRAMING MEMBER, AND ATTACH THE FRAMING MEMBERS TO THE SIGN PANELS ACCORDING TO THE TAPE MANUFACTURER'S WRITTEN INSTRUCTIONS, INCLUDING:
   A. THE CLEANING AND HANDLING OF THE SIGN PANELS AND FRAMING MEMBERS.
   B. THE APPLICATION OF THE ADHESIVE TAPE.
10. WHEN RIVETS ARE USED TO ATTACH FRAMING MEMBERS, INSTALL 2 RIVETS IN EACH END AND THE BALANCE ON 8" MAXIMUM CENTERS.
11. USE 3/16" DIAMETER RIVETS CONFORMING TO ALUMINUM ALLOY 6061-T6 FOR COLD DRIVEN RIVETS, OR ALUMINUM ALLOY 6061-T43 FOR HOT DRIVEN RIVETS.
12. THE BRACKETS USED ON EVEN INCH SIZE TUBES MAY ALSO BE USED ON TUBES 1/2" SMALLER IN SIZE.

PRELIMINARY

STATE OF ALASKA 49TH CHRISTOPHER J. GENTZ 12821 REGISTERED PROFESSIONAL ENGINEER
PS&E REVIEW MARCH 2018

STATE OF ALASKA DOT&PF
4111 AVIATION AVENUE
ANCHORAGE, AK 99502
(907) 269-0590

STATE OF ALASKA
DEPARTMENT OF TRANSPORTATION AND PUBLIC FACILITIES

SEWARD HWY: MP17-22.5 REHABILITATION

LIGHT SIGN FRAMING AND ATTACHMENT DETAILS

DESIGNED BY	GSB
CHECKED BY	CLB
DRAFTED BY	MF

XREFS: CENTRAL REGION TRAFFIC DETAIL 10/13/2016

SCALE: ------

LAYOUT: LT SIGN FRM

DATE TIME: 3/8/2018 11:04 AM

DRAWING LOCATION: W:\PROJECTS\SEWARD HWY MP 17-22.5 REHABILITATION - 53610\CIV3D16\PLANSET

DRAWING LOCATION: 53610_H03_TRAFFIC_DETAIL_34.DWG

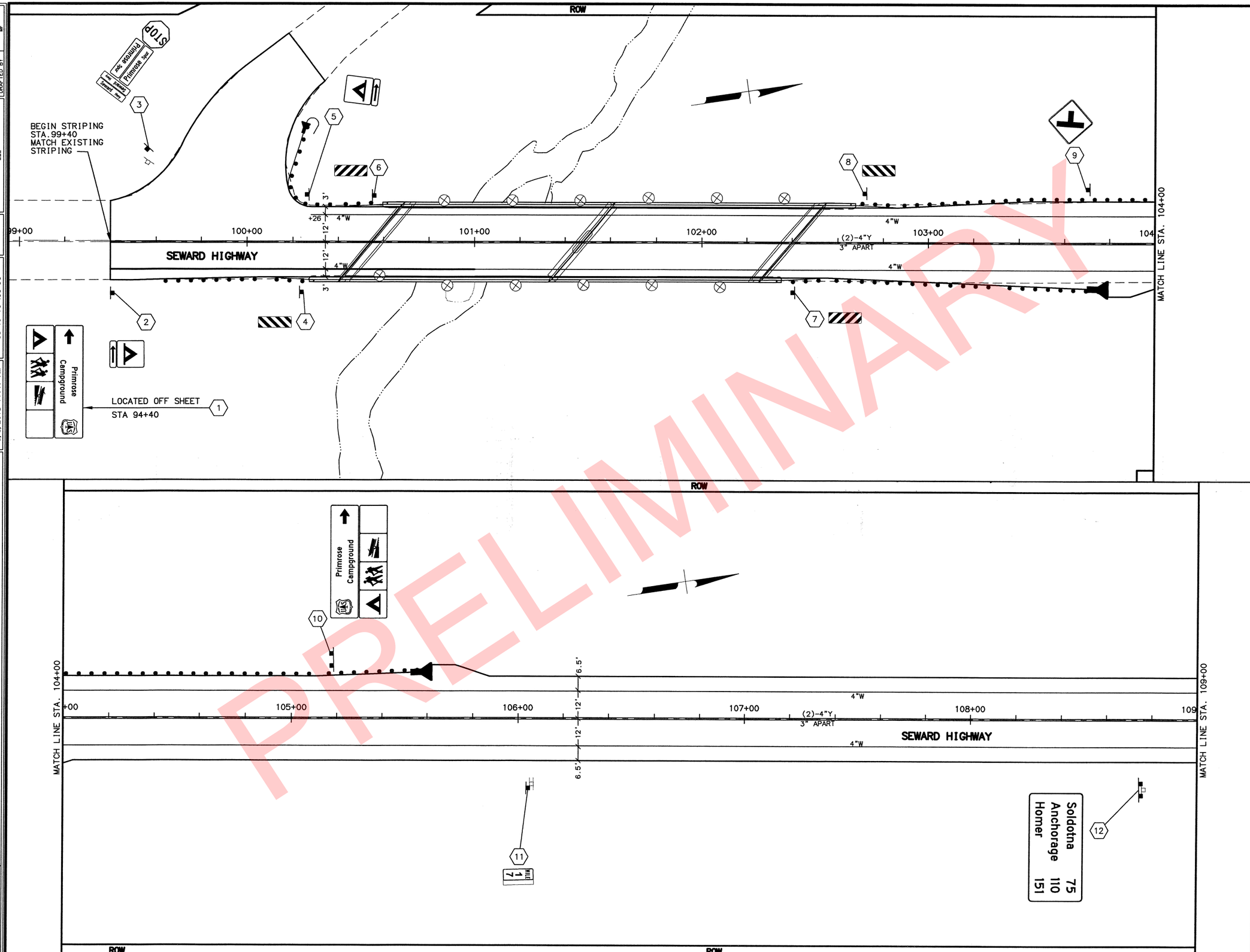

SHEET NO.	TOTAL SHEETS
H4	H38
STATE	YEAR
ALASKA	2018

PROJECT DESIGNATION

311032/Z536100000

ADDENDUM NO.

ATTACHMENT NO.

REVISIONS

NO.	DATE	DESCRIPTION

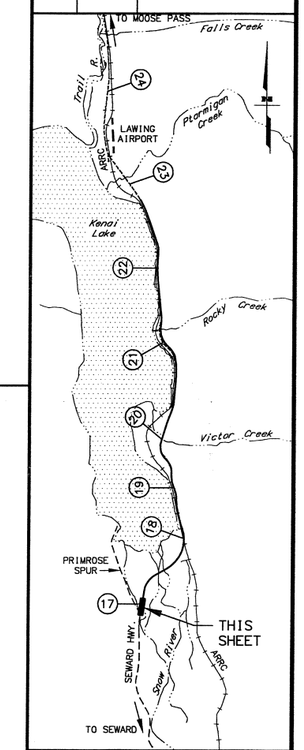

STATE OF ALASKA DOT&PF
4111 AVIATION AVENUE
ANCHORAGE, AK 99502
(907) 269-0590

STATE OF ALASKA 49TH CHRISTOPHER BENTZ 12821 PROFESSIONAL ENGINEER
PS&E REVIEW
MARCH 2018

STATE OF ALASKA
DEPARTMENT OF TRANSPORTATION
AND PUBLIC FACILITIES

SEWARD HWY: MP17-22.5
REHABILITATION

SIGNING AND STRIPING:
STA 99+40 TO STA 109+00

DESIGNED BY	GSB
CHECKED BY	CLB
DRAFTED BY	MF
XREFS	---

SCALE	-----
LAYOUT	99+40 TO 109+00
DATE TIME	3/8/2018 11:17 AM

DRAWING LOCATION W:\PROJECTS\SEWARD HWY MP 17-22.5 REHABILITATION - 53610\CIV3D16\PLANSET
DRAWING LOCATION 53610_H_STRIPING PLAN SHEETS.DWG

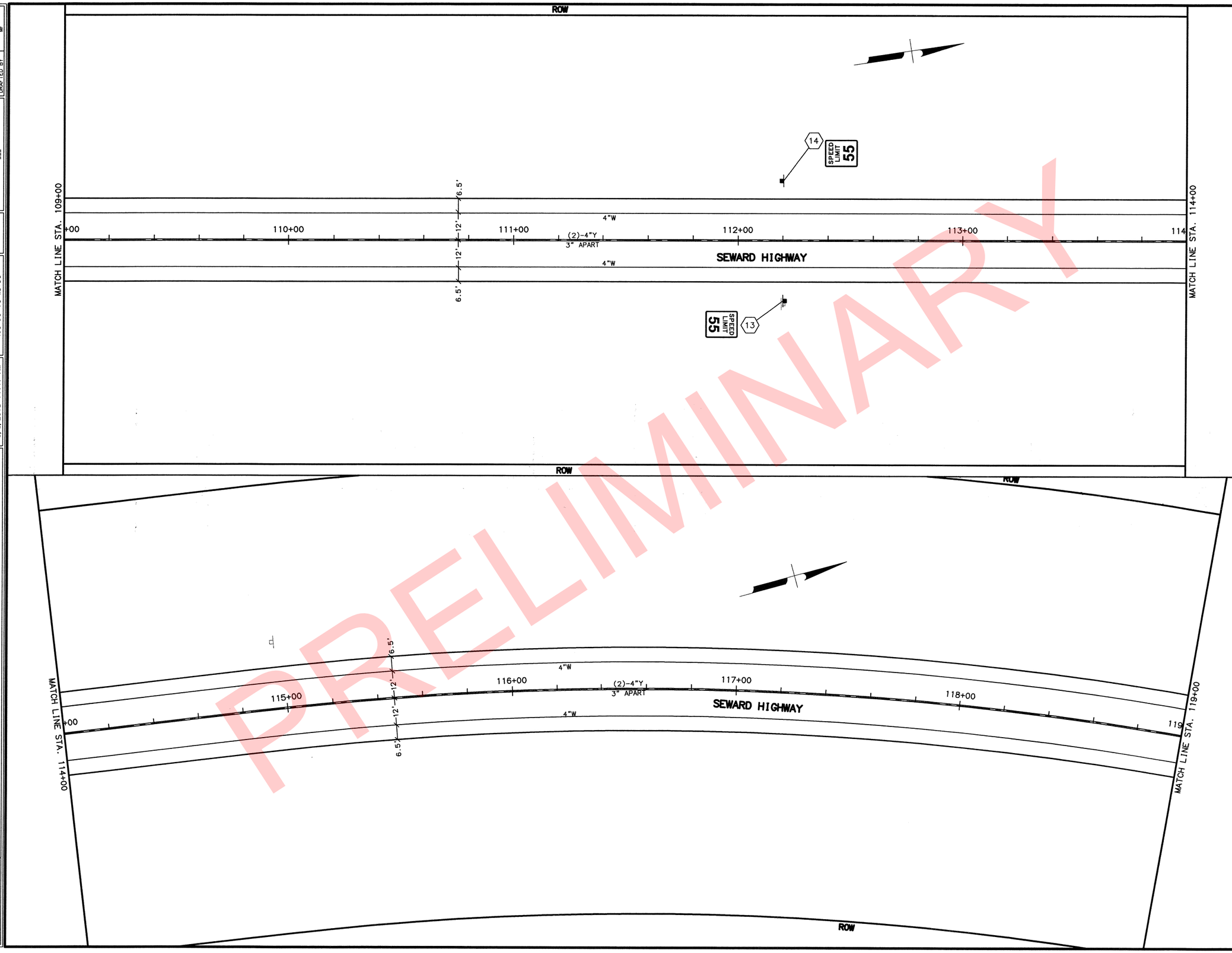

PRELIMINARY

SHEET NO.	TOTAL SHEETS
H5	H38
STATE	YEAR
ALASKA	2018

PROJECT DESIGNATION
311032/Z536100000

ADDENDUM NO.

ATTACHMENT NO.

REVISIONS

NO.	DATE	DESCRIPTION

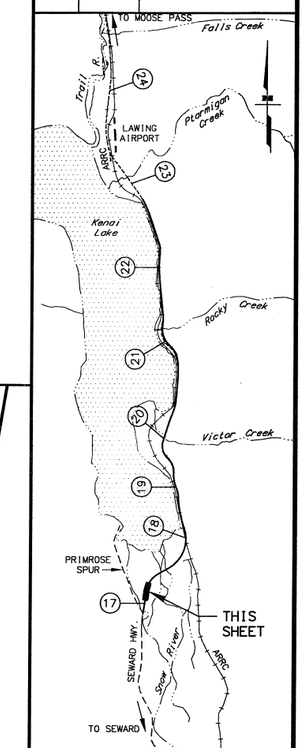

STATE OF ALASKA DOT&PF
4111 AVIATION AVENUE
ANCHORAGE, AK 99502
(907) 269-0590

STATE OF ALASKA 49TH CHRISTOPHER SENTZ 12821 REGISTERED PROFESSIONAL ENGINEER
PS&E REVIEW
MARCH 2018

STATE OF ALASKA
DEPARTMENT OF TRANSPORTATION
AND PUBLIC FACILITIES

SEWARD HWY: MP17-22.5
REHABILITATION

SIGNING AND STRIPING:
STA 109+00 TO STA 119+00

DRAWING LOCATION	W:\PROJECTS\SEWARD HWY MP 17-22.5 REHABILITATION - 53610\CIV3D16\PLANSET
DRAWING LOCATION	53610_H_STRIPING PLAN SHEETS.DWG
DATE TIME	3/8/2018 11:17 AM
LAYOUT	109+00 TO 119+00
SCALE	-----
XREFS	----

DESIGNED BY	GSB
CHECKED BY	CLB
DRAFTED BY	MF

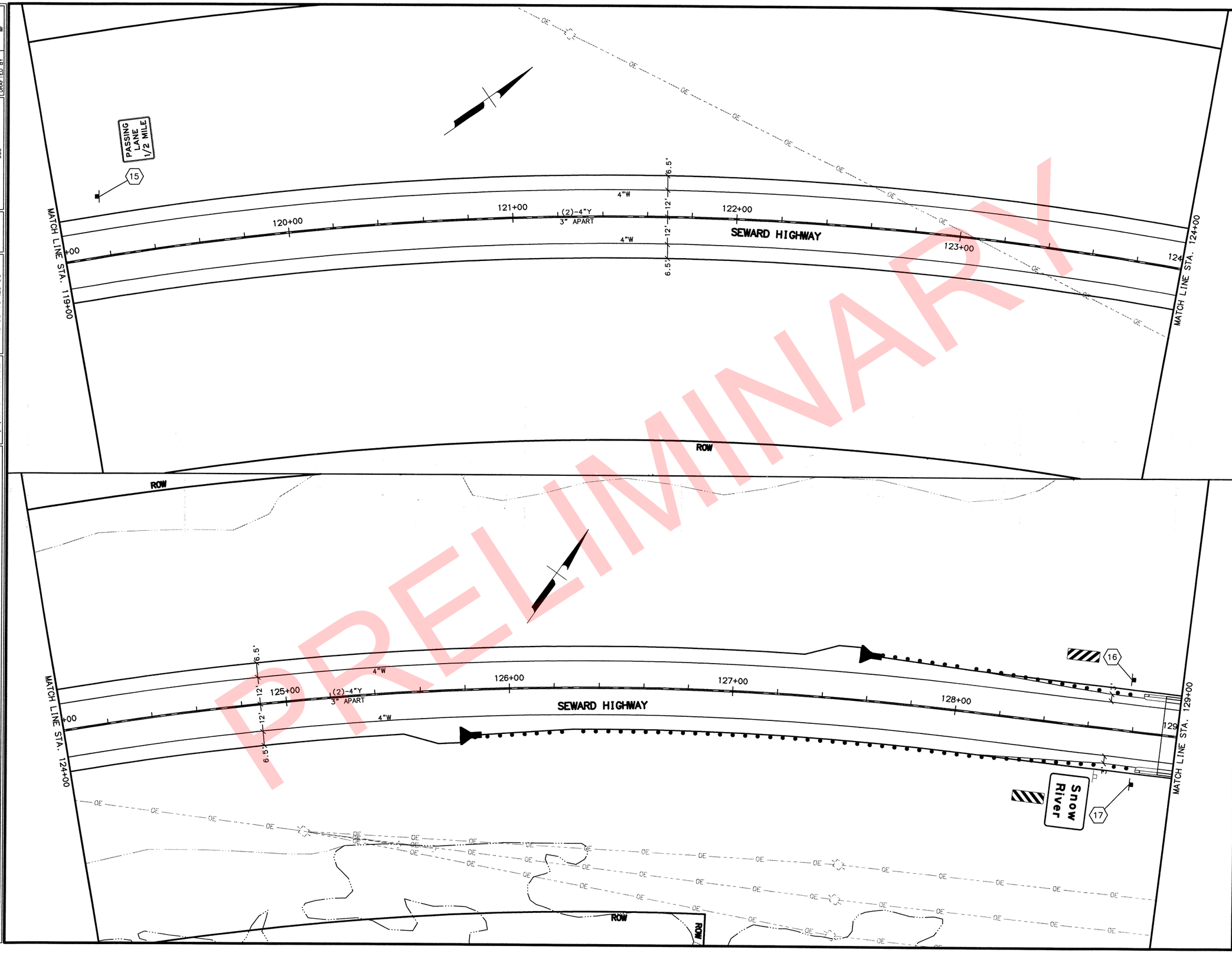

SHEET NO.	TOTAL SHEETS
H6	H38
STATE	YEAR
ALASKA	2018

PROJECT DESIGNATION

311032/Z536100000

ADDENDUM NO.

ATTACHMENT NO.

REVISIONS

NO.	DATE	DESCRIPTION

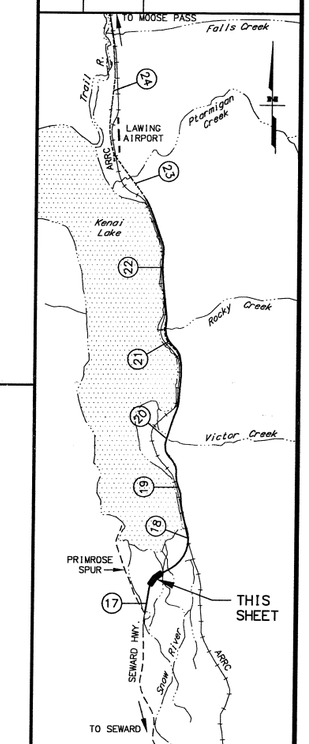

STATE OF ALASKA DOT&PF
4111 AVIATION AVENUE
ANCHORAGE, AK 99502
(907) 269-0590

STATE OF ALASKA
49TH
CHRISTOPHER BENTZ
12821
REGISTERED PROFESSIONAL ENGINEER

PS&E REVIEW
MARCH 2018

STATE OF ALASKA
DEPARTMENT OF TRANSPORTATION
AND PUBLIC FACILITIES

SEWARD HWY: MP17-22.5
REHABILITATION

SIGNING AND STRIPING:
STA 119+00 TO STA129+00

PRELIMINARY

DRAWING LOCATION	W:\PROJECTS\SEWARD HWY MP 17-22.5 REHABILITATION - 53610\CIV3D16\PLANSET
DRAWING LOCATION	53610_H_STRIPING PLAN SHEETS.DWG

DATE	TIME
3/8/2018	11:17 AM

LAYOUT	SCALE
119+00 TO 129+00	-----

XREFS	DESIGNED BY	CSB
---	CHECKED BY	CLB
---	DRAFTED BY	MF

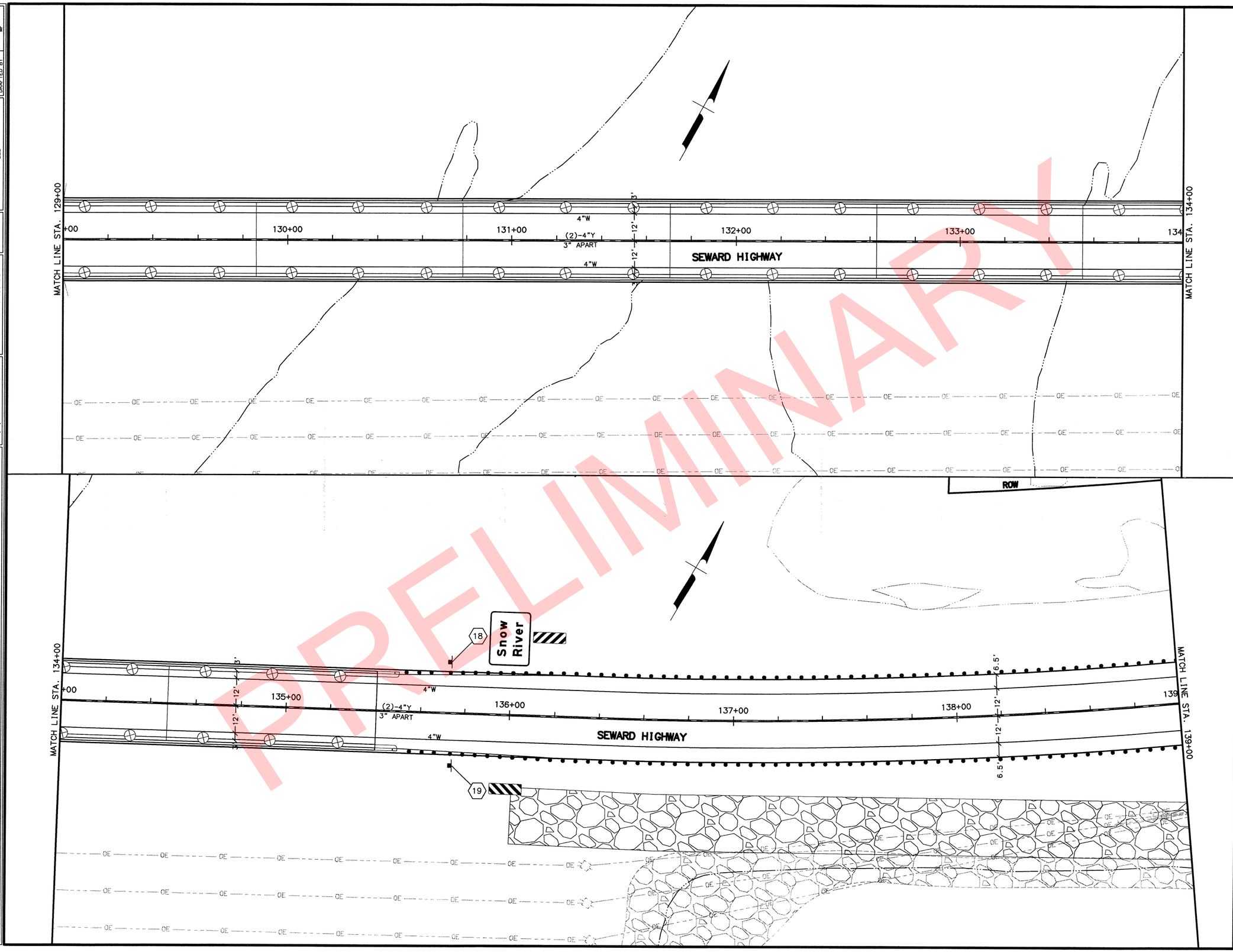

PRELIMINARY

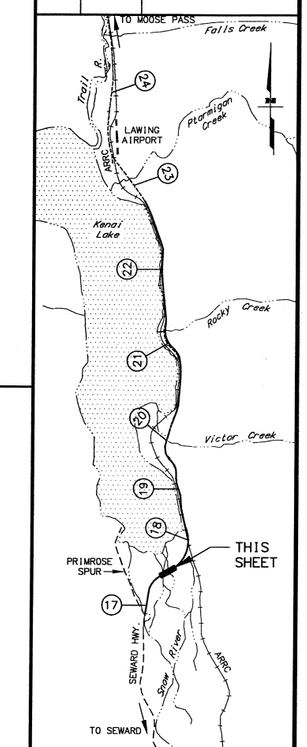

SHEET NO.	TOTAL SHEETS
H7	H38
STATE	YEAR
ALASKA	2018

PROJECT DESIGNATION

311032/Z536100000

ADDENDUM NO.

ATTACHMENT NO.

REVISIONS

NO.	DATE	DESCRIPTION

STATE OF ALASKA DOT&PF
4111 AVIATION AVENUE
ANCHORAGE, AK 99502
(907) 269-0590

STATE OF ALASKA
49TH
CHRISTOPHER L. BENTZ
2821
REGISTERED PROFESSIONAL ENGINEER
PS&E REVIEW
MARCH 2018

STATE OF ALASKA
DEPARTMENT OF TRANSPORTATION
AND PUBLIC FACILITIES

SEWARD HWY: MP17-22.5
REHABILITATION

SIGNING AND STRIPING:
STA 129+00 TO STA 139+00

DESIGNED BY GSB
CHECKED BY CLB
DRAFTED BY MF

XREFS

SCALE ----

LAYOUT 129+00 TO 139+00

DATE TIME 3/8/2018 11:18 AM

DRAWING LOCATION W:\PROJECTS\SEWARD HWY MP 17-22.5 REHABILITATION - 53610\CIV3D16\PLANSET
DRAWING LOCATION 53610_H_STRIPING PLAN SHEETS.DWG

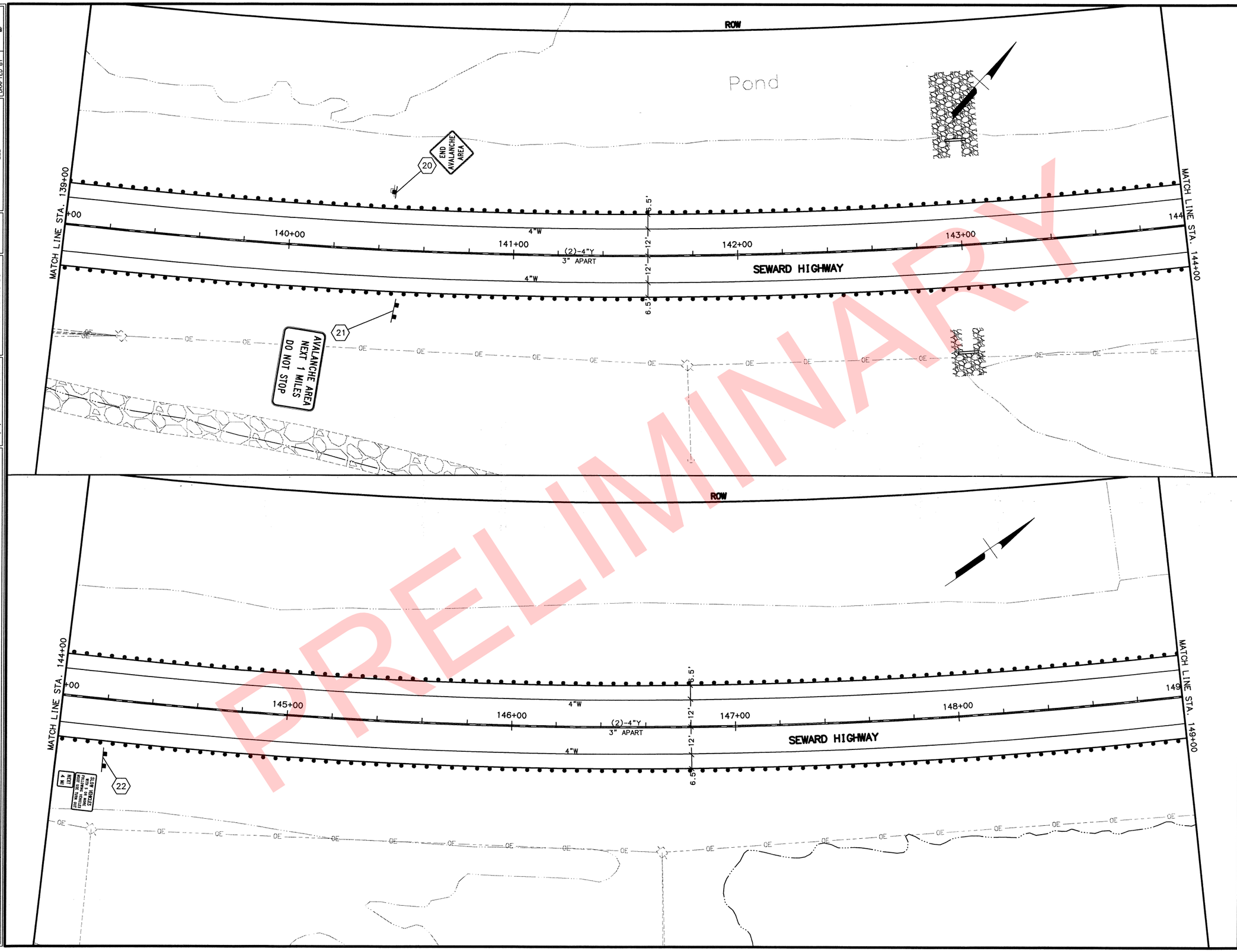

PRELIMINARY

SHEET NO.	TOTAL SHEETS
H8	H38
STATE	YEAR
ALASKA	2018

PROJECT DESIGNATION

311032/Z536100000

ADDENDUM NO.

ATTACHMENT NO.

REVISIONS

NO.	DATE	DESCRIPTION

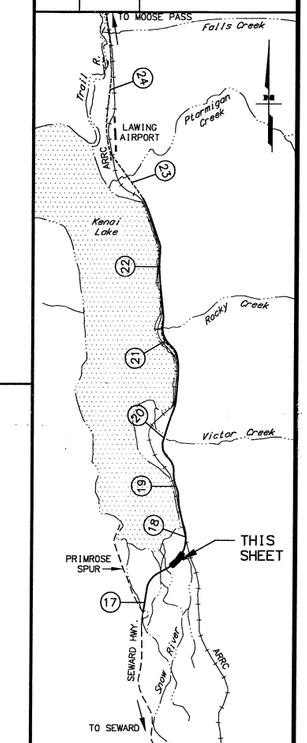

STATE OF ALASKA DOT&PF
4111 AVIATION AVENUE
ANCHORAGE, AK 99502
(907) 269-0590

STATE OF ALASKA
49TH
CHRISTOPHER BENTZ
12821
REGISTERED PROFESSIONAL ENGINEER

PS&E REVIEW
MARCH 2018

STATE OF ALASKA
DEPARTMENT OF TRANSPORTATION
AND PUBLIC FACILITIES

SEWARD HWY: MP17-22.5
REHABILITATION

SIGNING AND STRIPING:
STA 139+00 TO STA 149+00

DESIGNED BY GSB
CHECKED BY CLB
DRAFTED BY MF

XREFS

SCALE

LAYOUT
139+00 TO 149+00

DATE TIME
3/8/2018 11:18 AM

DRAWING LOCATION W:\PROJECTS\SEWARD HWY MP 17-22.5 REHABILITATION - 53610\CIV3D16\PLANSET
DRAWING LOCATION 53610_H_STRIPING PLAN SHEETS.DWG

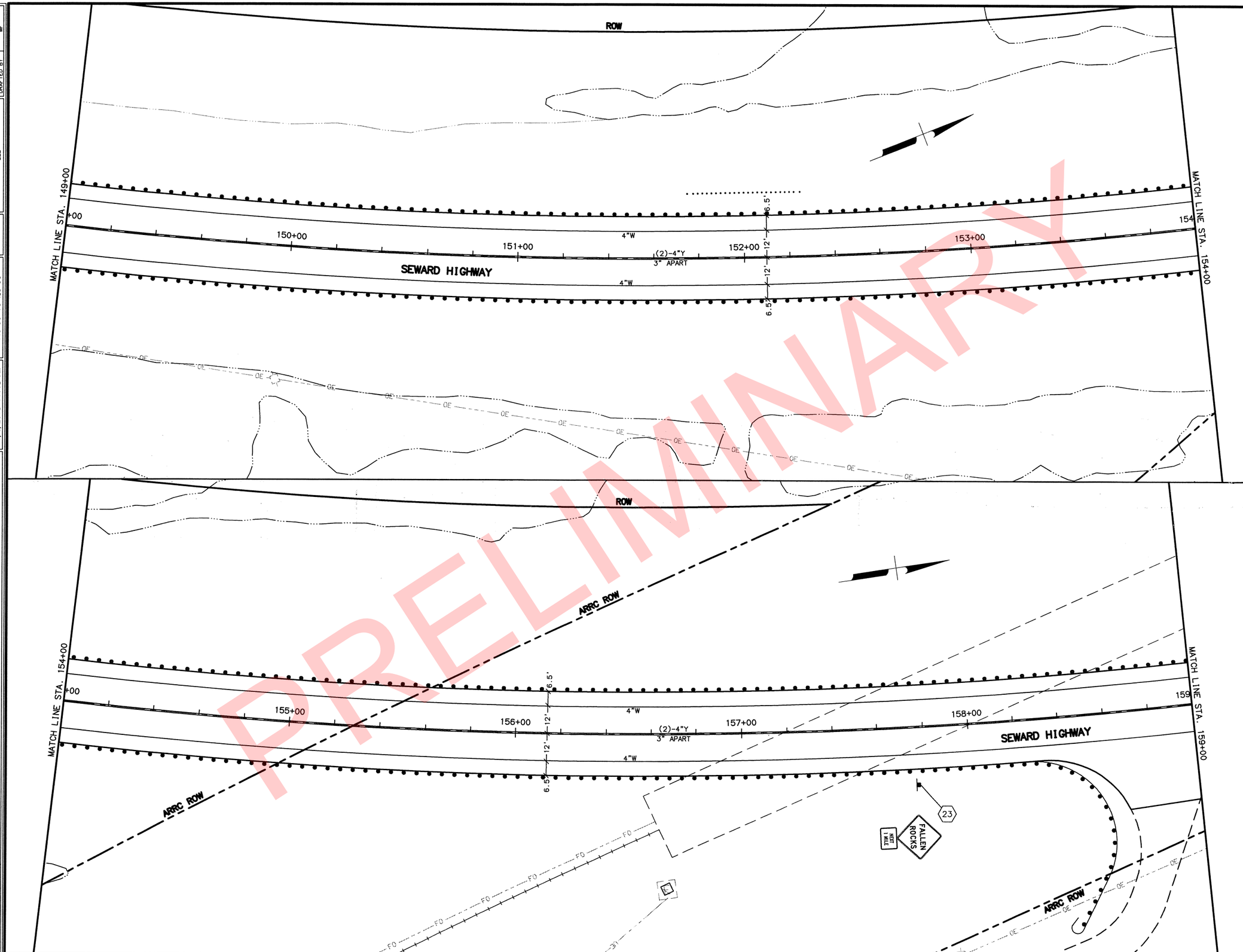

PRELIMINARY

DESIGNED BY	GSB
CHECKED BY	CLB
DRAFTED BY	MF

XREFS: ---

SCALE: ----

LAYOUT: 149+00 TO 159+00

DATE TIME: 3/8/2018 11:18 AM

DRAWING LOCATION: W:\PROJECTS\SEWARD HWY MP 17-22.5 REHABILITATION - 53610\CIV3016\PLANSET

DRAWING LOCATION: 53610_H_STRIPING PLAN SHEETS.DWG

SHEET NO.	TOTAL SHEETS
H9	H38
STATE	YEAR
ALASKA	2018

PROJECT DESIGNATION: 311032/Z536100000

ADDENDUM NO.

ATTACHMENT NO.

REVISIONS

NO.	DATE	DESCRIPTION

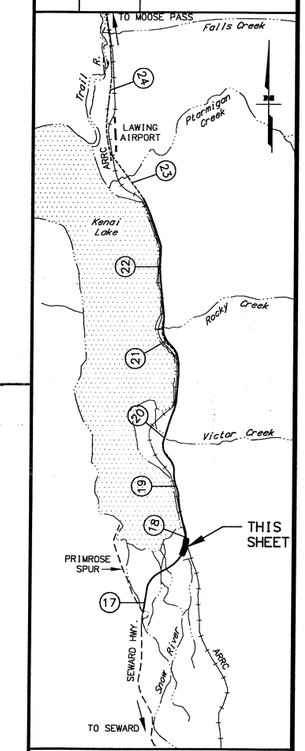

STATE OF ALASKA DOT&PF
4111 AVIATION AVENUE
ANCHORAGE, AK 99502
(907) 269-0590

STATE OF ALASKA
49TH
CHRISTOPHER BENTZ
12821
REGISTERED PROFESSIONAL ENGINEER

PS&E REVIEW
MARCH 2018

STATE OF ALASKA
DEPARTMENT OF TRANSPORTATION
AND PUBLIC FACILITIES

SEWARD HWY: MP17-22.5
REHABILITATION

SIGNING AND STRIPING:
STA 149+00 TO STA 159+00

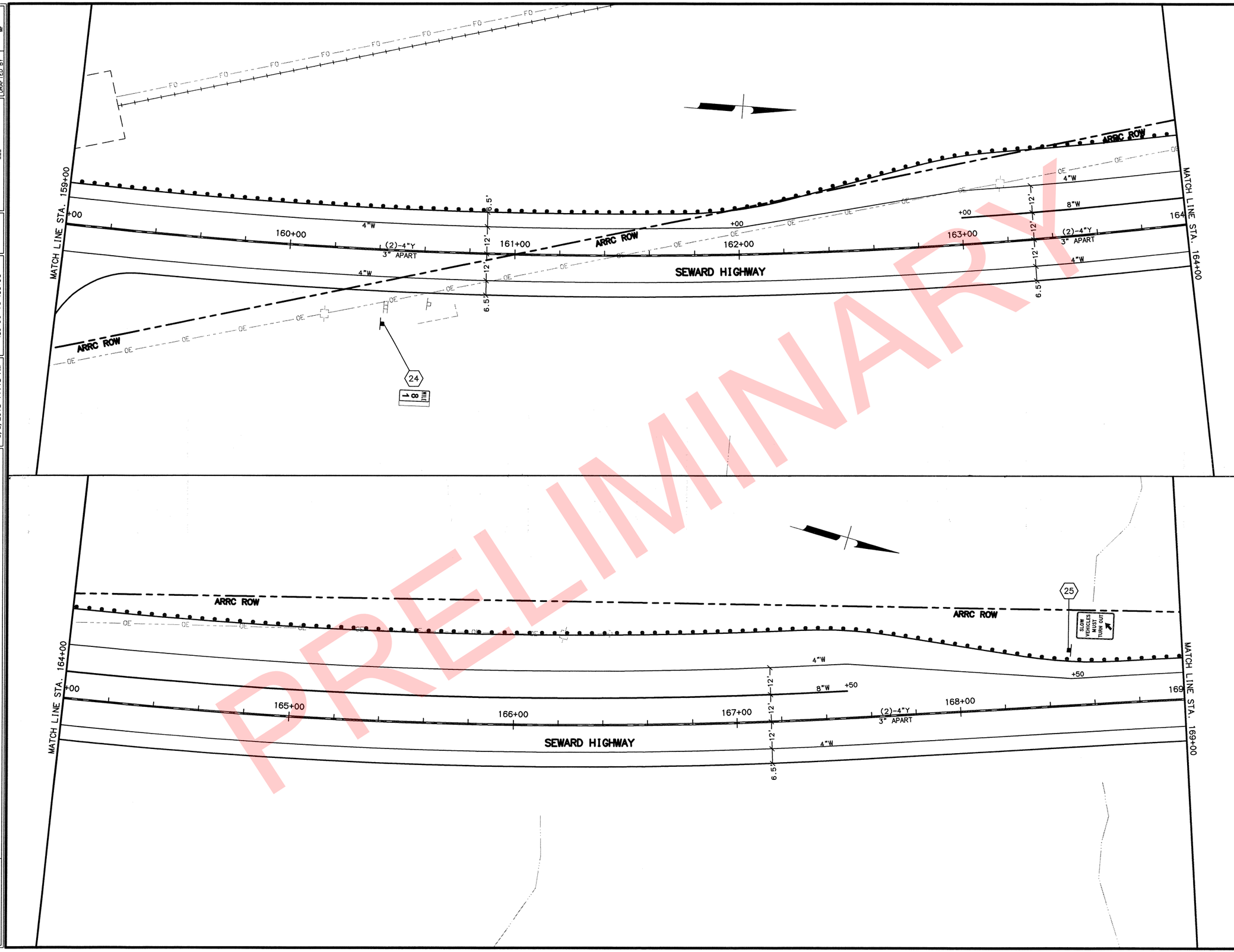

SHEET NO.	TOTAL SHEETS
H10	H38
STATE	YEAR
ALASKA	2018

PROJECT DESIGNATION

311032/Z536100000

ADDENDUM NO.

ATTACHMENT NO.

REVISIONS

NO.	DATE	DESCRIPTION

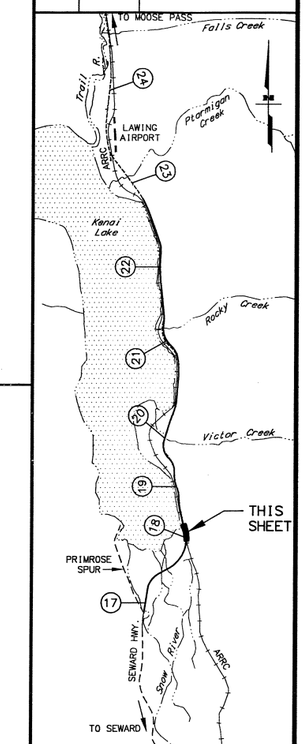

STATE OF ALASKA DOT&PF
4111 AVIATION AVENUE
ANCHORAGE, AK 99502
(907) 269-0590

STATE OF ALASKA 49TH CHRISTOPHER L. BENTZ 12821 PROFESSIONAL ENGINEER

PS&E REVIEW MARCH 2018

STATE OF ALASKA
DEPARTMENT OF TRANSPORTATION
AND PUBLIC FACILITIES

SEWARD HWY: MP17-22.5
REHABILITATION

SIGNING AND STRIPING:
STA 159+00 TO STA 169+00

DESIGNED BY GSB
CHECKED BY CLB
DRAFTED BY MF

XREFS

SCALE

LAYOUT
159+00 TO 169+00

DATE TIME
3/8/2018 11:18 AM

DRAWING LOCATION W:\PROJECTS\SEWARD HWY MP 17-22.5 REHABILITATION - 53610\CIV3D16\PLANSET
DRAWING LOCATION 53610_H_STRIPING PLAN SHEETS.DWG

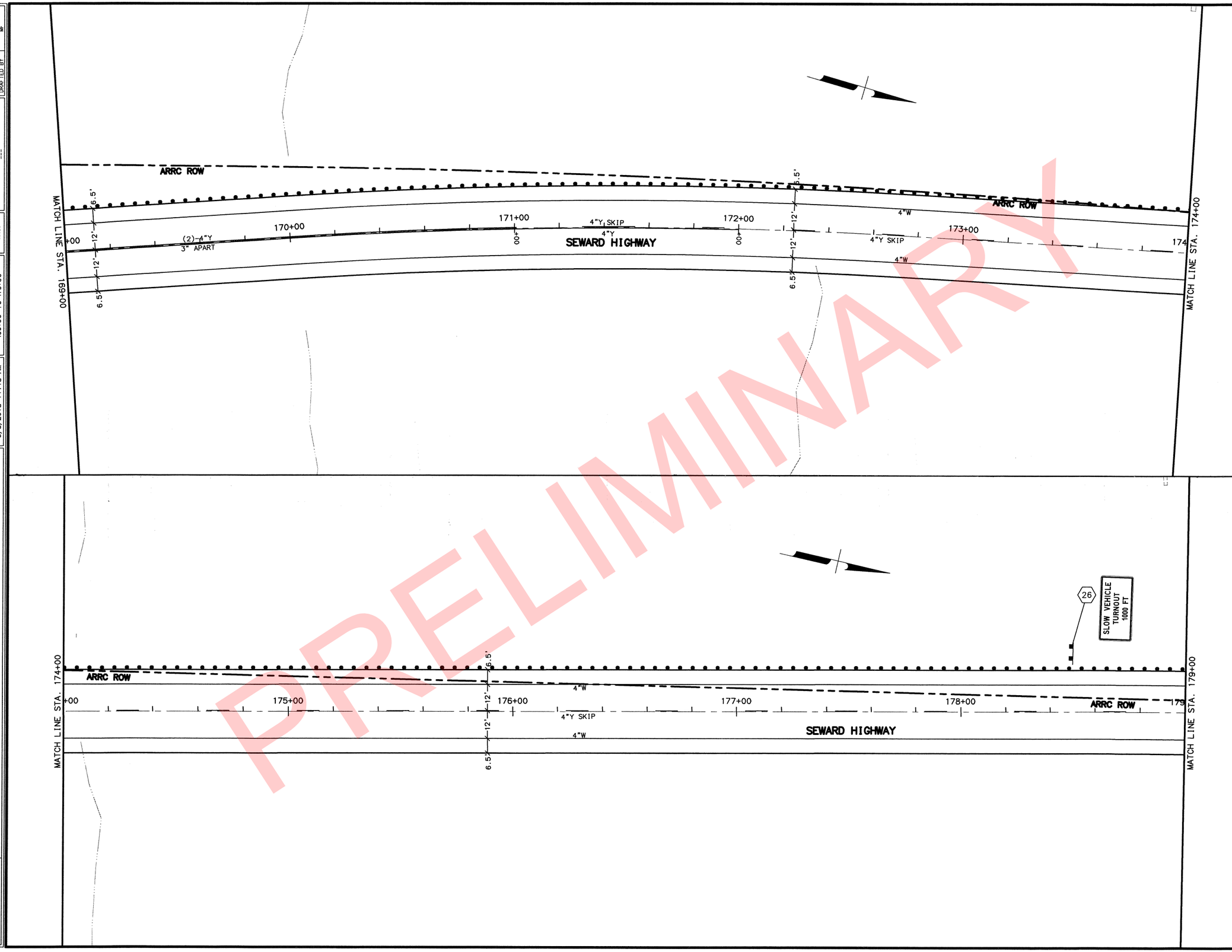

PRELIMINARY

SHEET NO.	TOTAL SHEETS
H11	H38
STATE	YEAR
ALASKA	2018

PROJECT DESIGNATION

311032/Z536100000

ADDENDUM NO.

ATTACHMENT NO.

REVISIONS

NO.	DATE	DESCRIPTION

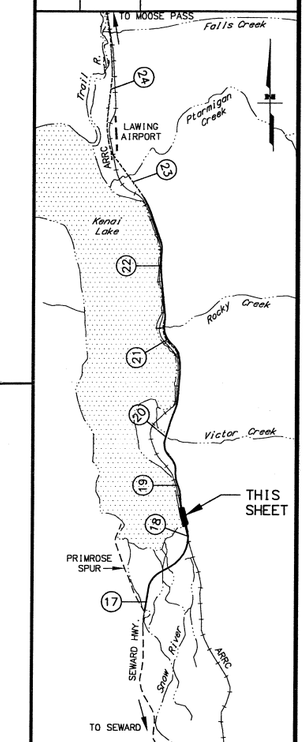

STATE OF ALASKA DOT&PF
4111 AVIATION AVENUE
ANCHORAGE, AK 99502
(907) 269-0590

STATE OF ALASKA
49TH
CHRISTOPHER L. BENTZ
12821
PROFESSIONAL ENGINEER

PS&E REVIEW
MARCH 2018

STATE OF ALASKA
DEPARTMENT OF TRANSPORTATION
AND PUBLIC FACILITIES

SEWARD HWY: MP17-22.5
REHABILITATION

SIGNING AND STRIPING:
STA 169+00 TO STA 179+00

DESIGNED BY	GSB
CHECKED BY	CLB
DRAFTED BY	MF
XREFS	---

SCALE	----
LAYOUT	169+00 TO 179+00
DATE TIME	3/8/2018 11:18 AM
DRAWING LOCATION	W:\PROJECTS\SEWARD HWY MP 17-22.5 REHABILITATION - 53610\CIV3D16\PLANSET
DRAWING LOCATION	53610_H_STRIPING PLAN SHEETS.DWG

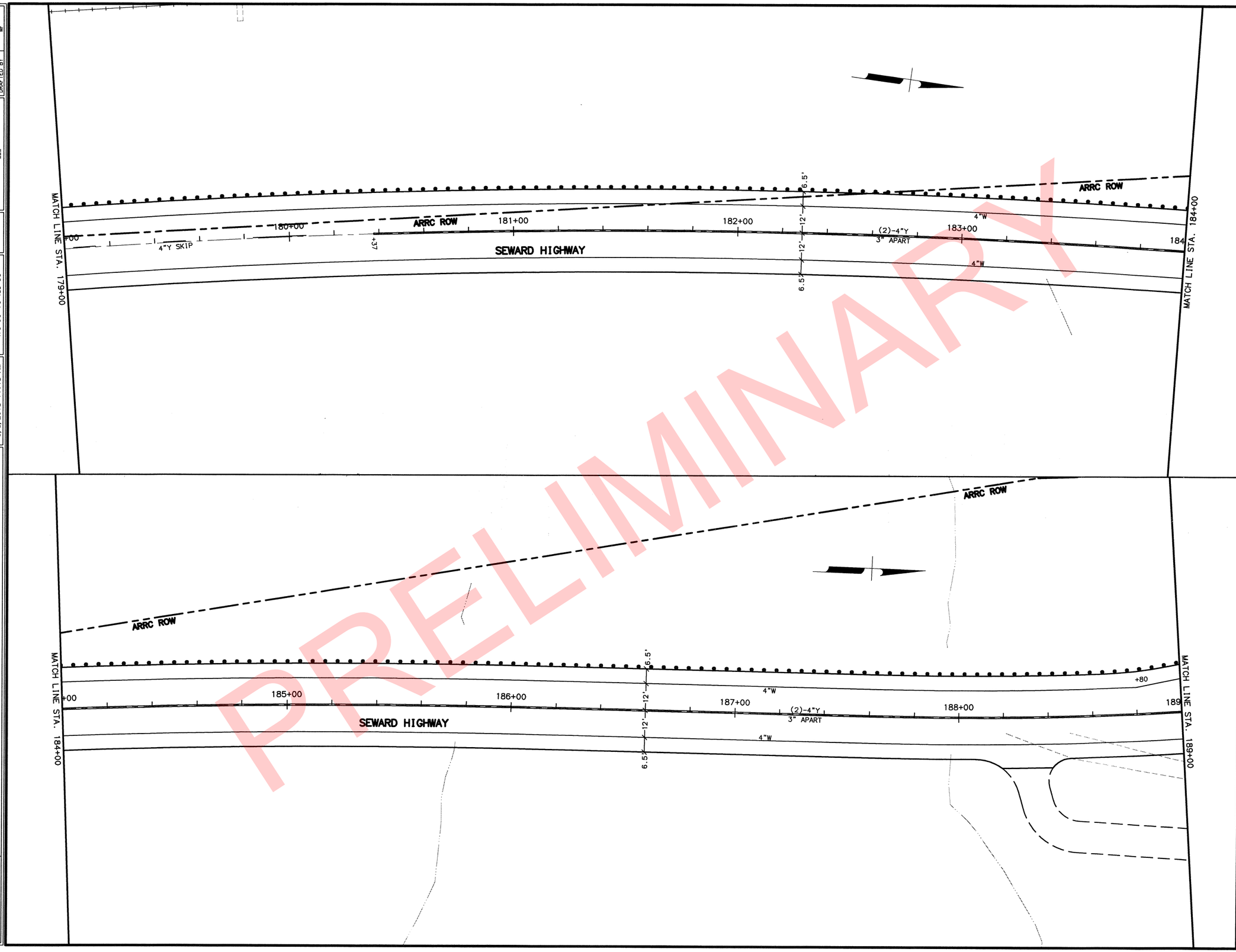

PRELIMINARY

SHEET NO.	TOTAL SHEETS
H12	H38
STATE	YEAR
ALASKA	2018

PROJECT DESIGNATION

311032/Z536100000

ADDENDUM NO.

ATTACHMENT NO.

REVISIONS

NO.	DATE	DESCRIPTION

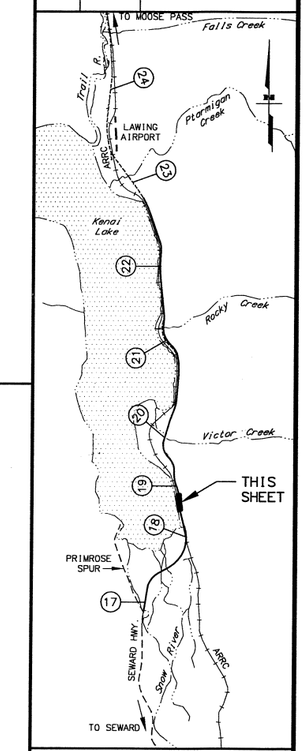

STATE OF ALASKA DOT&PF
4111 AVIATION AVENUE
ANCHORAGE, AK 99502
(907) 269-0590

STATE OF ALASKA
49TH
CHRISTOPHER BENTZ
12821
REGISTERED PROFESSIONAL ENGINEER

PS&E REVIEW
MARCH 2018

STATE OF ALASKA
DEPARTMENT OF TRANSPORTATION
AND PUBLIC FACILITIES

SEWARD HWY: MP17-22.5
REHABILITATION

SIGNING AND STRIPING:
STA 179+00 TO STA 189+00

DESIGNED BY	GSB
CHECKED BY	CLB
DRAFTED BY	WF
XREFS	----
SCALE	-----
LAYOUT	179+00 TO 189+00
DATE TIME	3/8/2018 11:18 AM
DRAWING LOCATION	W:\PROJECTS\SEWARD HWY MP 17-22.5 REHABILITATION - 53610\CIV3016\PLANSET
DRAWING LOCATION	53610_H_STRIPING PLAN SHEETS.DWG

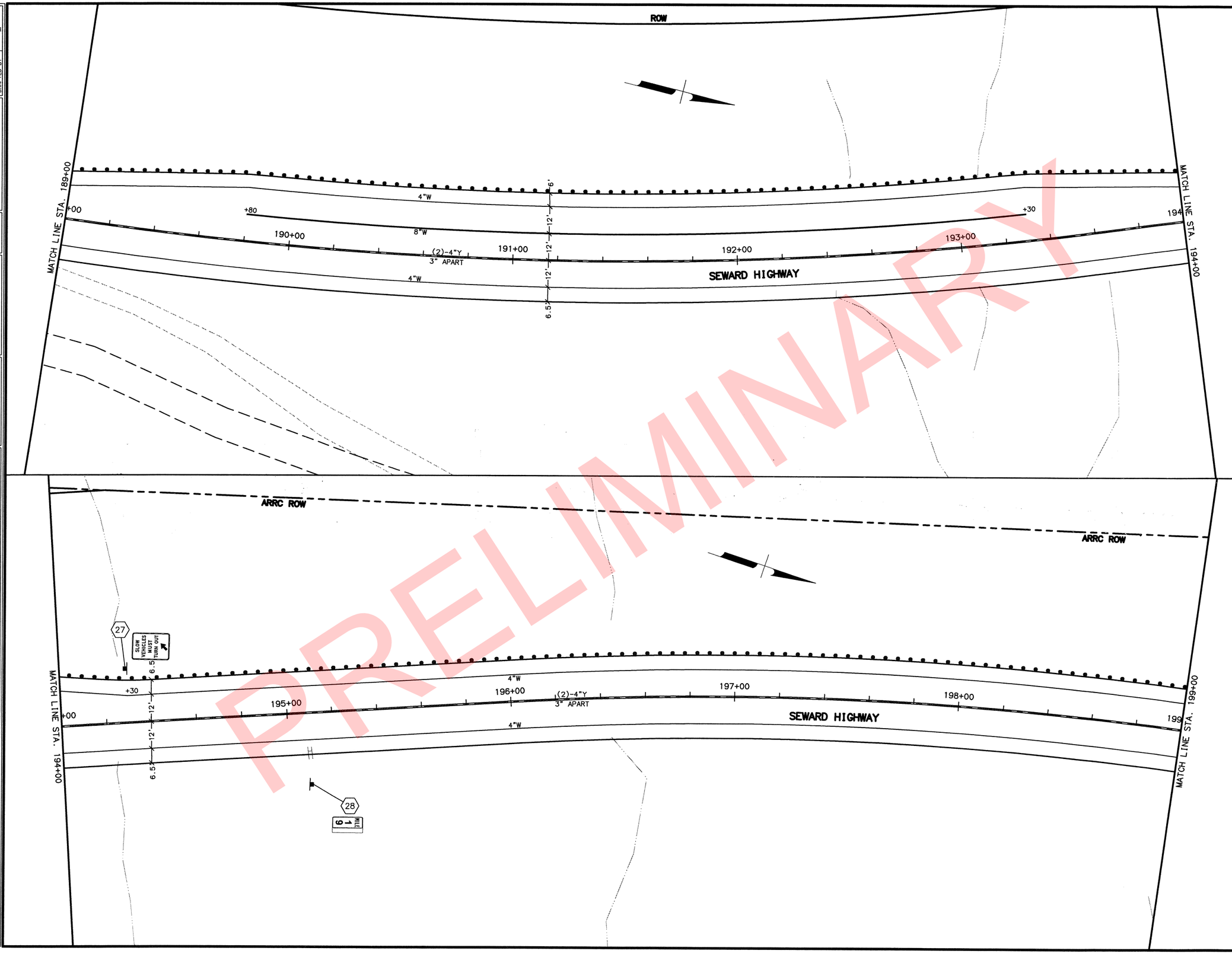

PRELIMINARY

SHEET NO.	TOTAL SHEETS
H13	H38
STATE	YEAR
ALASKA	2018

PROJECT DESIGNATION

311032/Z536100000

ADDENDUM NO.

ATTACHMENT NO.

REVISIONS

NO.	DATE	DESCRIPTION

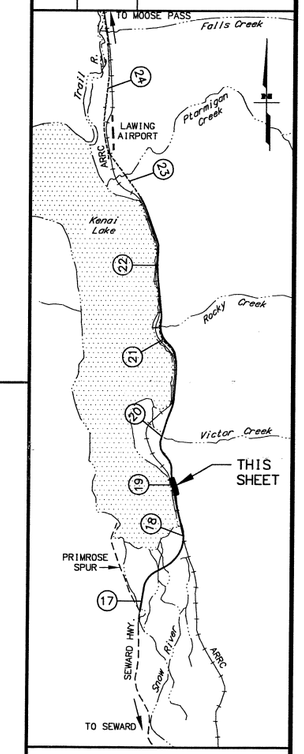

STATE OF ALASKA DOT&PF
4111 AVIATION AVENUE
ANCHORAGE, AK 99502
(907) 269-0590

STATE OF ALASKA
49TH
CHRISTOPHER J. GENTZ
12821
REGISTERED PROFESSIONAL ENGINEER

PS&E REVIEW
MARCH 2018

STATE OF ALASKA
DEPARTMENT OF TRANSPORTATION
AND PUBLIC FACILITIES

SEWARD HWY: MP17-22.5
REHABILITATION

SIGNING AND STRIPING:
STA 189+00 TO STA 199+00

DESIGNED BY	GSB
CHECKED BY	CLB
DRAFTED BY	WF
XREFS	----
SCALE	-----
LAYOUT	189+00 TO 199+00
DATE TIME	3/8/2018 11:19 AM
DRAWING LOCATION	W:\PROJECTS\SEWARD HWY MP 17-22.5 REHABILITATION - 53610\CIV3016\PLANSET
DRAWING LOCATION	53610_H_STRIPING PLAN SHEETS.DWG

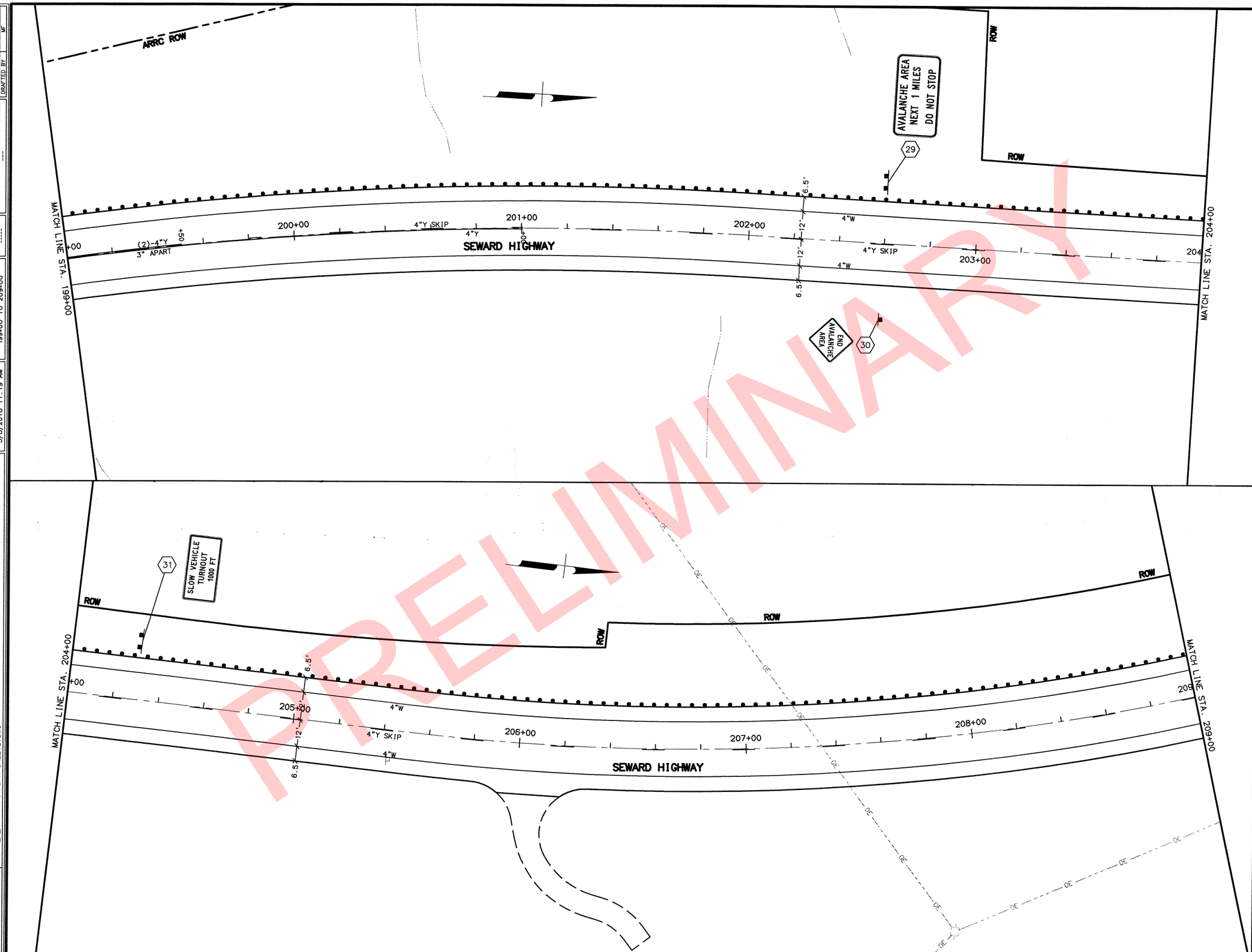

PRELIMINARY

DRAWING LOCATION	W:\PROJECTS\SEWARD HWY MP 17-22.5 REHABILITATION - 53610\C1V3D16\PLANSET
DRAWING LOCATION	53610_H_STRIPING PLAN SHEETS.DWG

DATE	TIME	LAYOUT	SCALE	XREFS	DESIGNED BY	CSB
3/8/2018	11:19 AM	199+00 TO 209+00	-----	---	CHECKED BY	CJB
					DRAFTED BY	MP

SHEET NO.	TOTAL SHEETS
H14	H38
STATE	YEAR
ALASKA	2018

PROJECT DESIGNATION

311032/Z536100000

ADDENDUM NO.

ATTACHMENT NO.

REVISIONS

NO.	DATE	DESCRIPTION

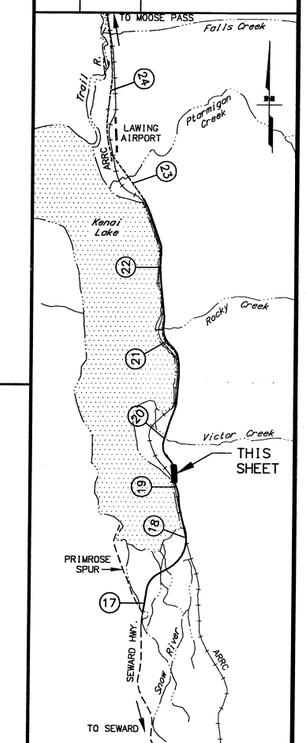

STATE OF ALASKA DOT&PF
4111 AVIATION AVENUE
ANCHORAGE, AK 99502
(907) 269-0590

STATE OF ALASKA 49TH CHRISTOPHER J. BENTZ 12821 REGISTERED PROFESSIONAL ENGINEER

PS&E REVIEW MARCH 2018

STATE OF ALASKA
DEPARTMENT OF TRANSPORTATION
AND PUBLIC FACILITIES

SEWARD HWY: MP17-22.5
REHABILITATION

SIGNING AND STRIPING:
STA 199+00 TO STA 209+00

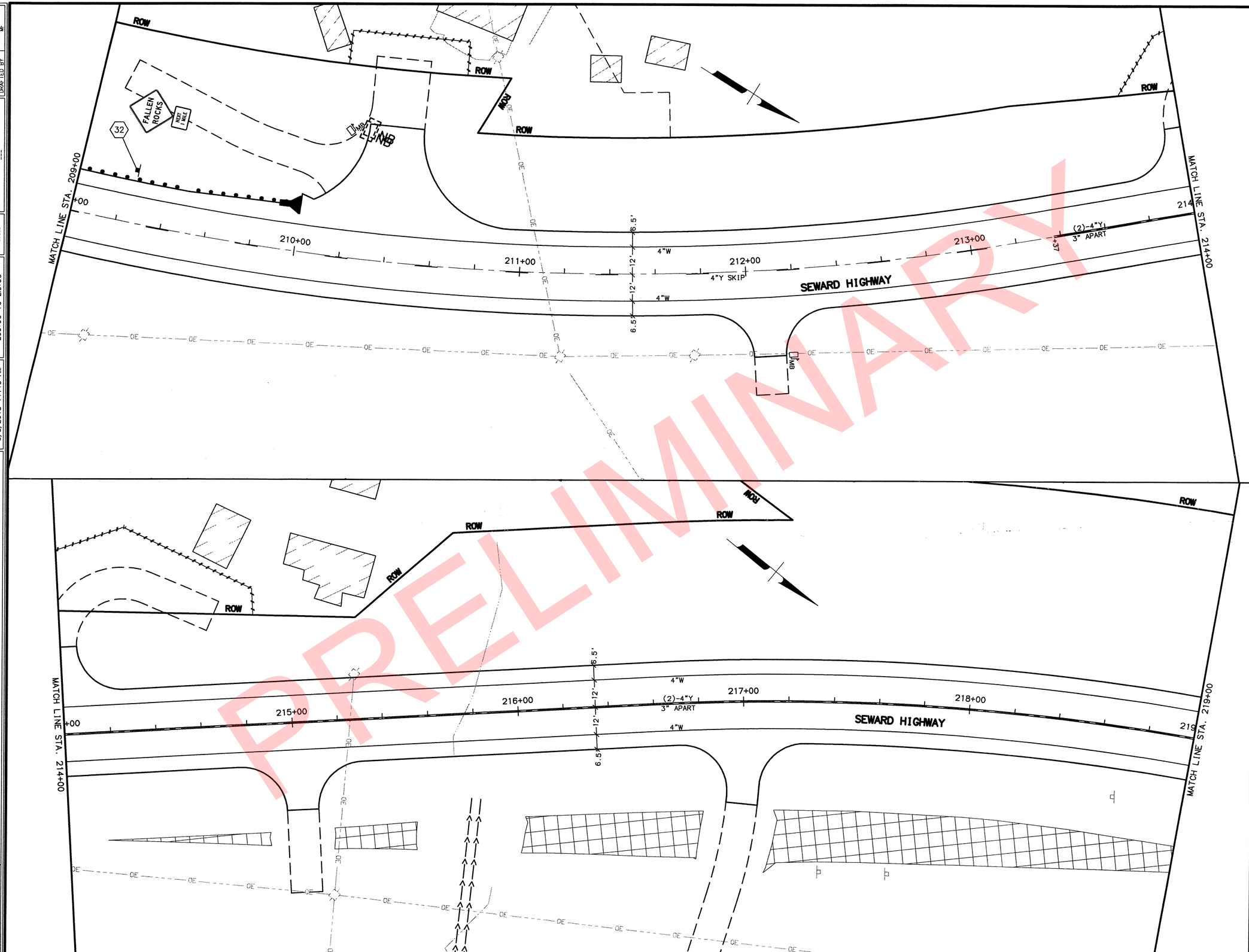

PRELIMINARY

DRAWING LOCATION	W:\PROJECTS\SEWARD HWY MP 17-22.5 REHABILITATION - 53610\CIV3D16\PLANSET
DRAWING LOCATION	53610_H_STRIPING PLAN SHEETS.DWG

DATE	TIME	LAYOUT	SCALE	XREFS	DESIGNED BY	GSB
3/8/2018	11:19 AM	209+00 TO 219+00	----	---	CHECKED BY	CLB
				---	DRAFTED BY	MF

SHEET NO.	TOTAL SHEETS
H15	H38
STATE	YEAR
ALASKA	2018

PROJECT DESIGNATION

311032/Z536100000

ADDENDUM NO.

ATTACHMENT NO.

REVISIONS

NO.	DATE	DESCRIPTION

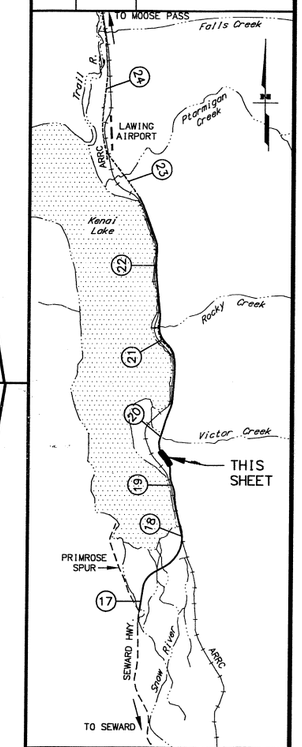

STATE OF ALASKA DOT&PF
4111 AVIATION AVENUE
ANCHORAGE, AK 99502
(907) 269-0590

STATE OF ALASKA
49TH
CHRISTOPHER BENTZ
12821
REGISTERED PROFESSIONAL ENGINEER

PS&E REVIEW
MARCH 2018

STATE OF ALASKA
DEPARTMENT OF TRANSPORTATION
AND PUBLIC FACILITIES

SEWARD HWY: MP17-22.5
REHABILITATION

SIGNING AND STRIPING:
STA 209+00 TO STA 219+00

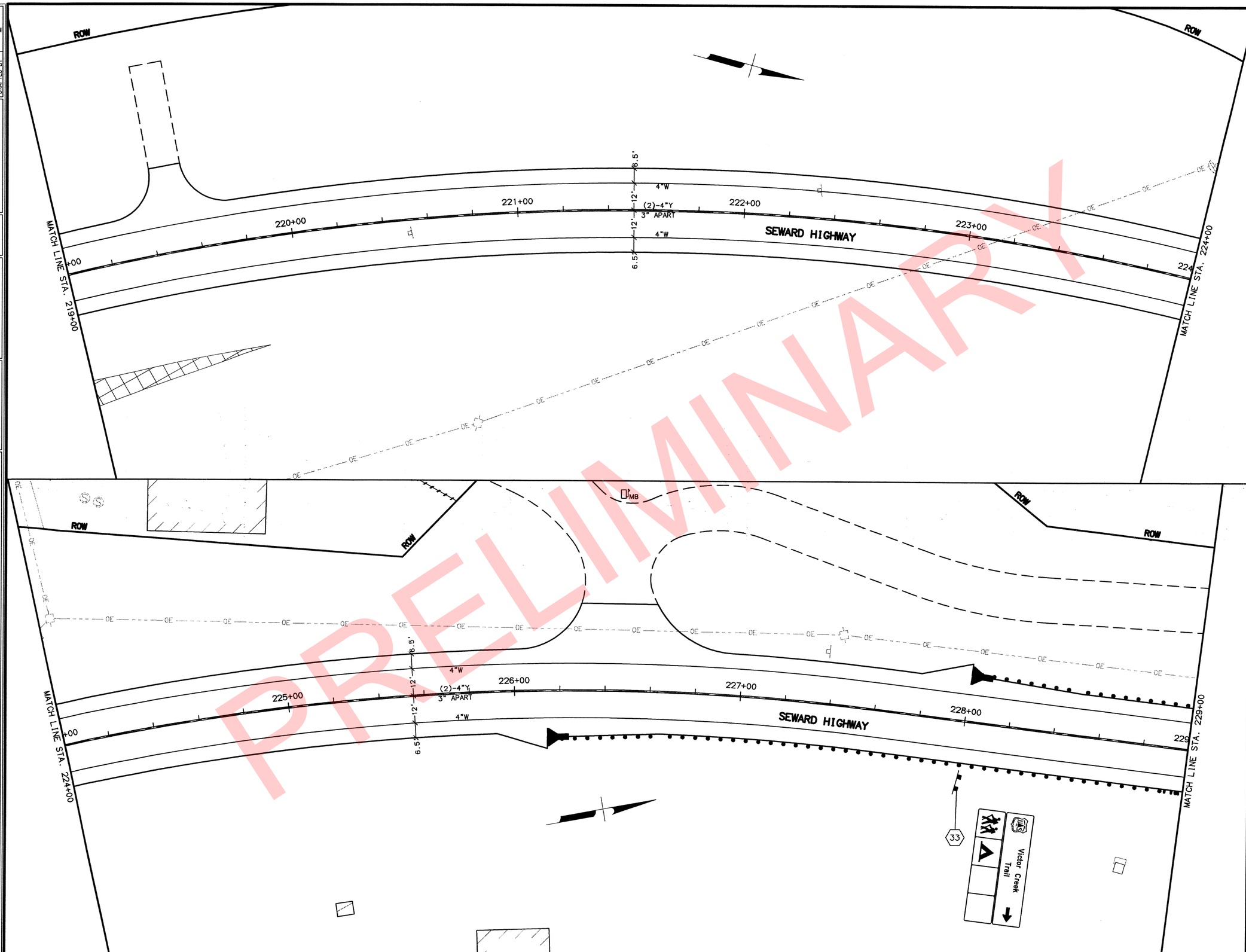

PRELIMINARY

DRAWING LOCATION	W:\PROJECTS\SEWARD HWY MP 17-22.5 REHABILITATION - 53610\CIV3016\PLANSET
DRAWING LOCATION	53610_H_STRIPING PLAN SHEETS.DWG

DATE	TIME	LAYOUT	SCALE	XREFS	DESIGNED BY	CHECKED BY	DRAFTED BY
3/8/2018	11:19 AM	219+00 TO 229+00	----	----	GSB	CLB	MF

SHEET NO.	TOTAL SHEETS
H16	H38
STATE	YEAR
ALASKA	2018

PROJECT DESIGNATION

311032/Z536100000

ADDENDUM NO.

ATTACHMENT NO.

REVISIONS

NO.	DATE	DESCRIPTION

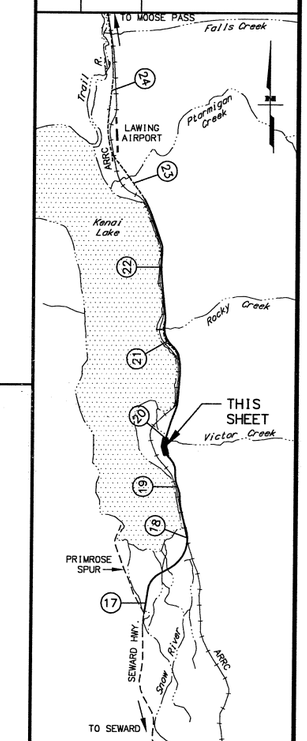

STATE OF ALASKA DOT&PF
4111 AVIATION AVENUE
ANCHORAGE, AK 99502
(907) 269-0590

STATE OF ALASKA
49TH
CHRISTOPHER BENTZ
12821
PROFESSIONAL ENGINEER

PS&E REVIEW
MARCH 2018

STATE OF ALASKA
DEPARTMENT OF TRANSPORTATION
AND PUBLIC FACILITIES

SEWARD HWY: MP17-22.5
REHABILITATION

SIGNING AND STRIPING:
STA 219+00 TO STA 229+00

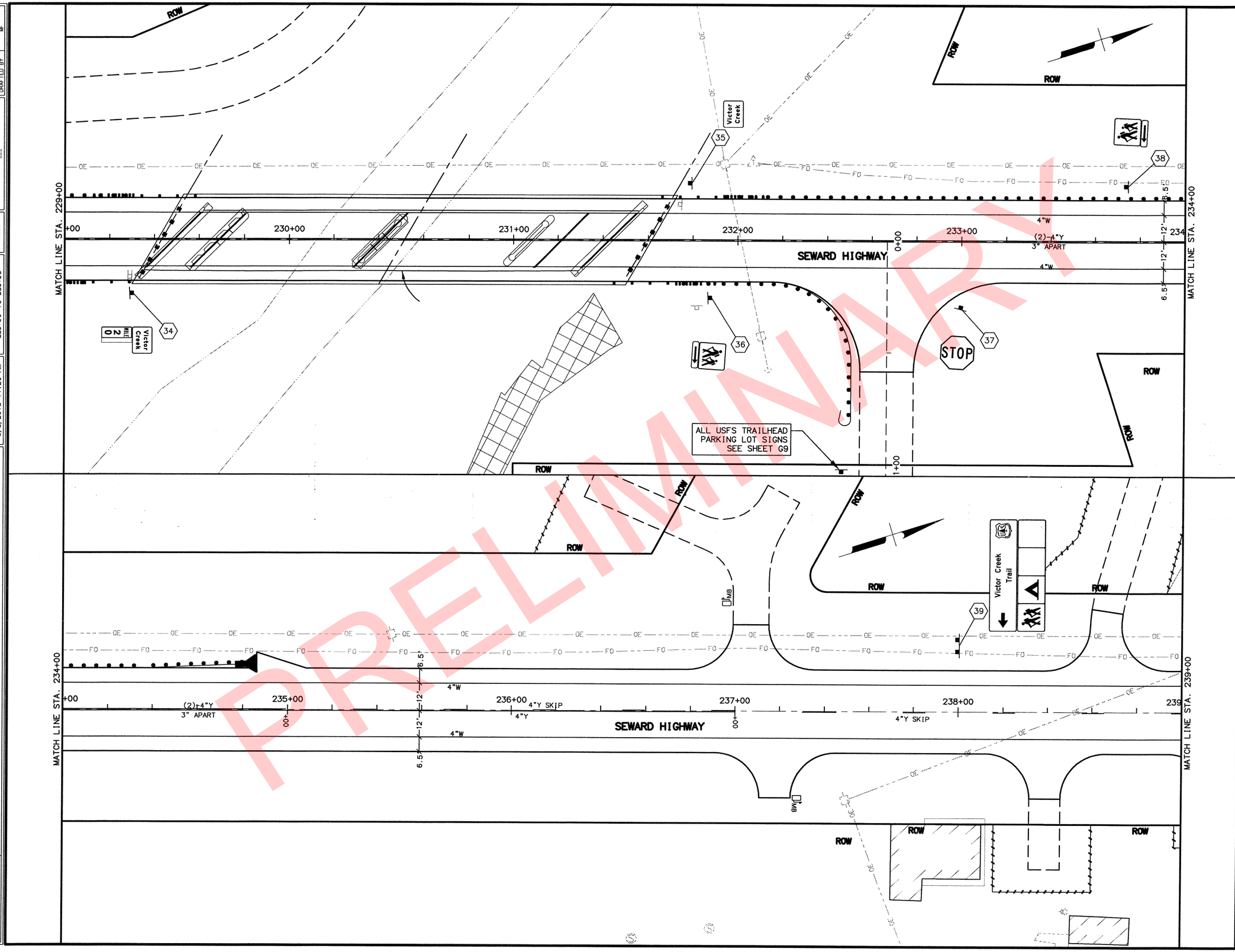

SHEET NO.	TOTAL SHEETS
H17	H38
STATE	YEAR
ALASKA	2018

PROJECT DESIGNATION

311032/Z536100000

ADDENDUM NO.

ATTACHMENT NO.

REVISIONS

NO.	DATE	DESCRIPTION

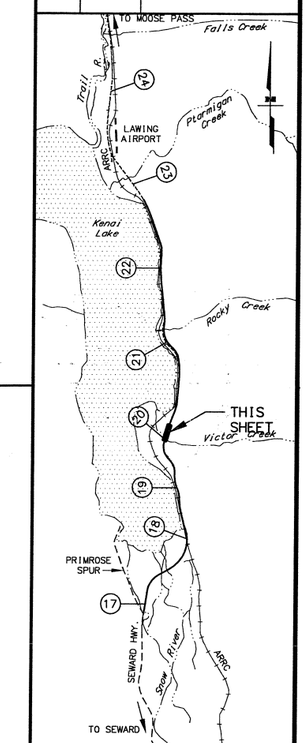

STATE OF ALASKA DOT&PF
4111 AVIATION AVENUE
ANCHORAGE, AK 99502
(907) 269-0590

STATE OF ALASKA
DEPARTMENT OF TRANSPORTATION AND PUBLIC FACILITIES

SEWARD HWY: MP17-22.5
REHABILITATION

SIGNING AND STRIPING:
STA 229+00 TO STA 239+00

PS&E REVIEW
MARCH 2018

DESIGNED BY GSB
CHECKED BY CLB
DRAFTED BY MF

XREFS ---

SCALE ----

LAYOUT 229+00 TO 239+00

DATE TIME 3/8/2018 11:20 AM

DRAWING LOCATION W:\PROJECTS\SEWARD HWY MP 17-22.5 REHABILITATION - 53610\CIV3D16\PLANSET
DRAWING LOCATION 53610_H_STRIPING PLAN SHEETS.DWG

SHEET NO.	TOTAL SHEETS
H18	H38
STATE	YEAR
ALASKA	2018

PROJECT DESIGNATION

311032/Z536100000

ADDENDUM NO.

ATTACHMENT NO.

REVISIONS

NO.	DATE	DESCRIPTION

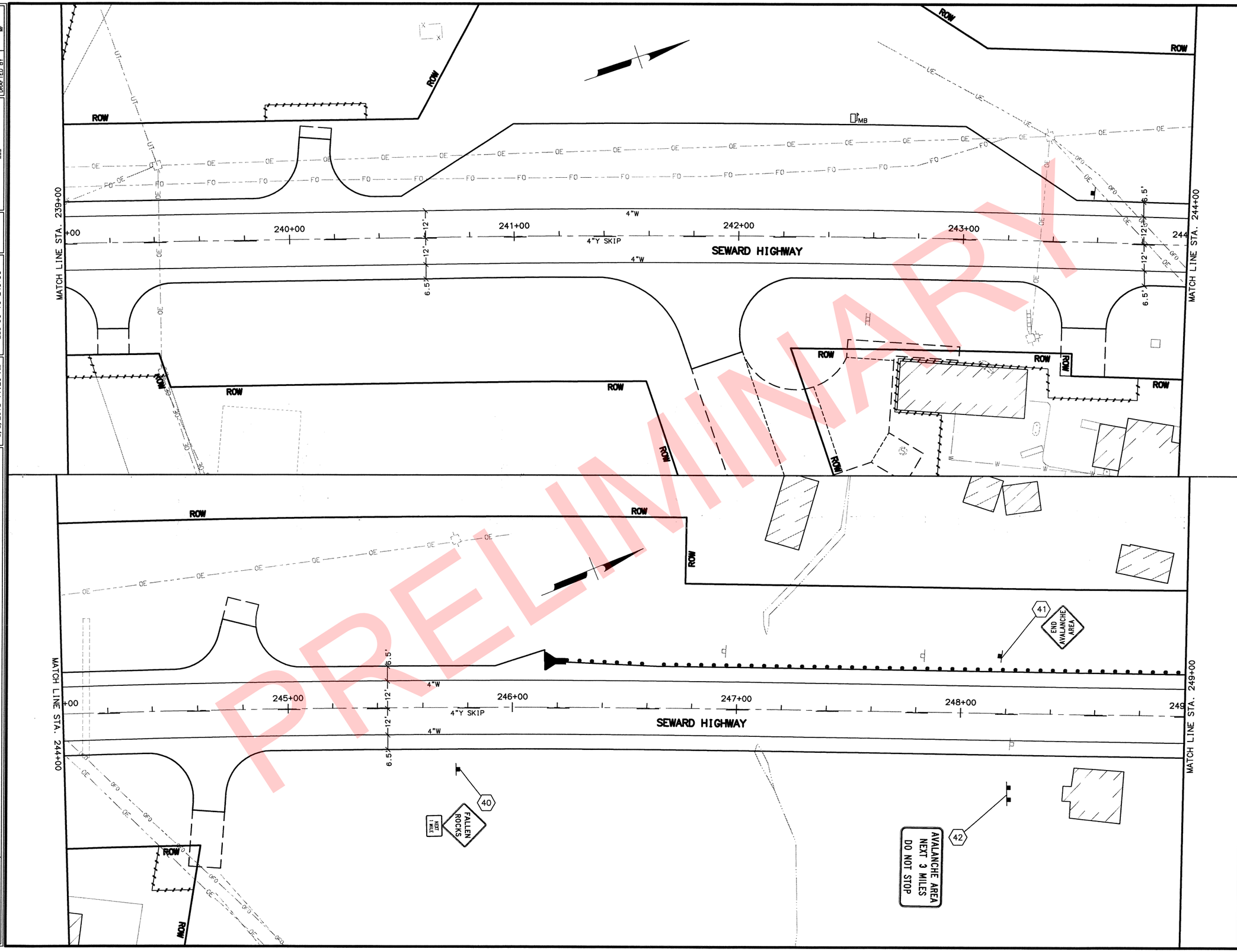

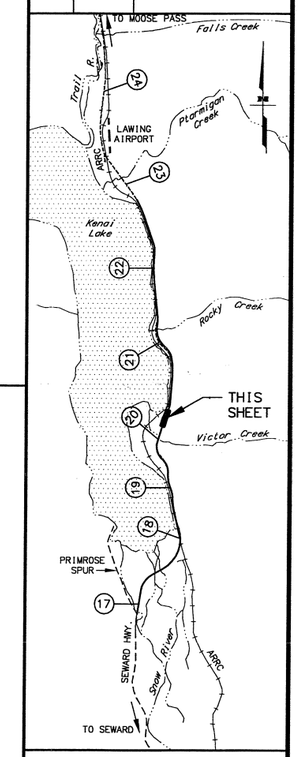

STATE OF ALASKA DOT&PF
4111 AVIATION AVENUE
ANCHORAGE, AK 99502
(907) 269-0590

STATE OF ALASKA 49TH CHRISTOPHER L. BENTZ 12821 REGISTERED PROFESSIONAL ENGINEER

PS&E REVIEW MARCH 2018

STATE OF ALASKA
DEPARTMENT OF TRANSPORTATION
AND PUBLIC FACILITIES

SEWARD HWY: MP17-22.5
REHABILITATION

SIGNING AND STRIPING:
STA 239+00 TO STA 249+00

DESIGNED BY	GSB
CHECKED BY	CLB
DRAFTED BY	WF
XREFS	---
SCALE	-----
LAYOUT	239+00 TO 249+00
DATE TIME	3/8/2018 11:20 AM

DRAWING LOCATION W:\PROJECTS\SEWARD HWY MP 17-22.5 REHABILITATION - 53610\C1V3D16\PLANSET
DRAWING LOCATION 53610_H_STRIPING PLAN SHEETS.DWG

PRELIMINARY

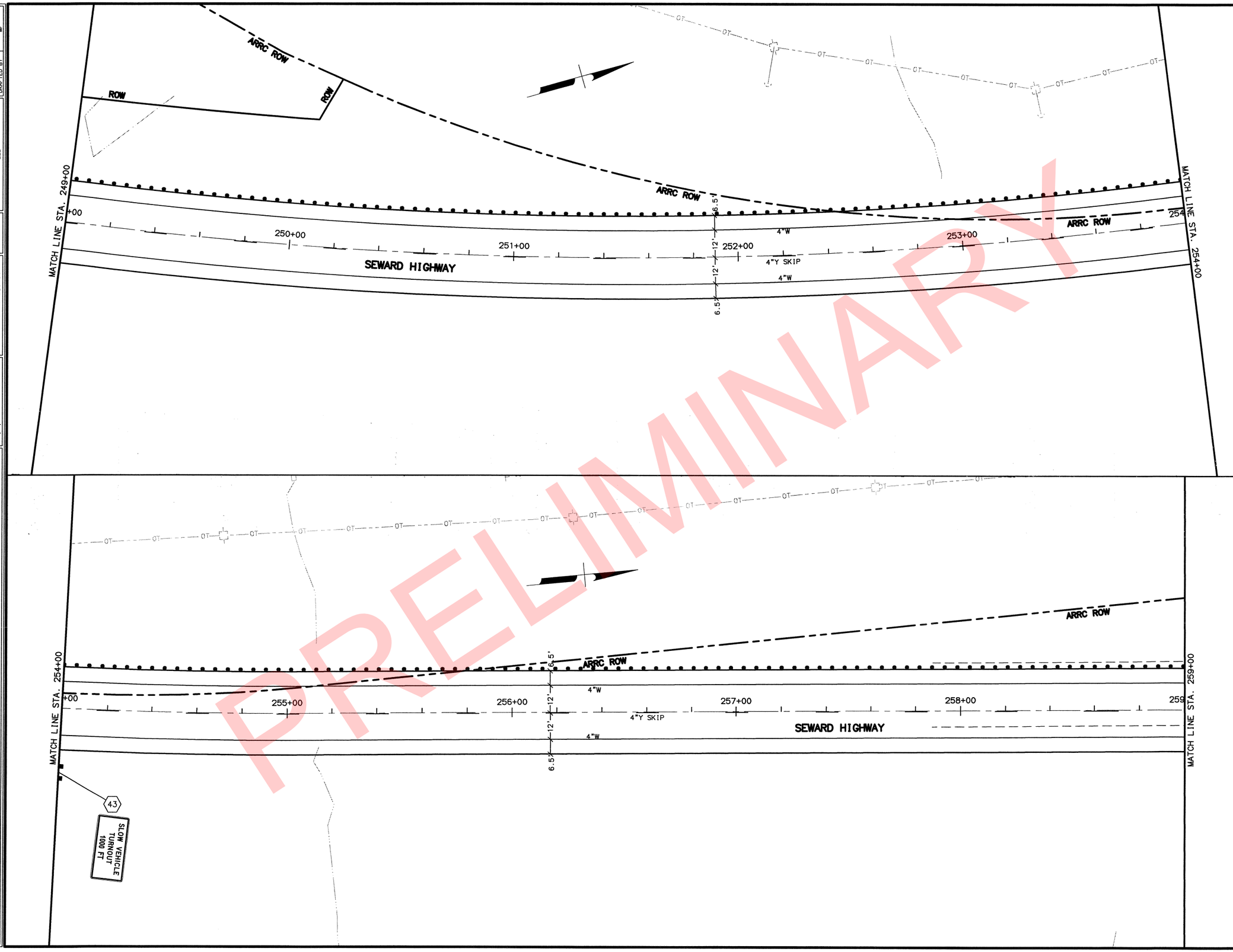

SHEET NO.	TOTAL SHEETS
H19	H38
STATE	YEAR
ALASKA	2018

PROJECT DESIGNATION

311032/Z536100000

ADDENDUM NO.

ATTACHMENT NO.

REVISIONS

NO.	DATE	DESCRIPTION

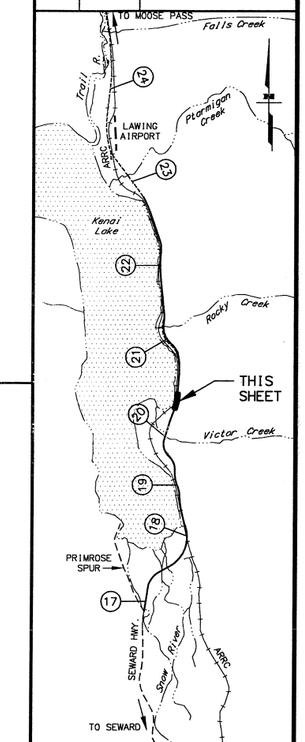

STATE OF ALASKA DOT&PF
4111 AVIATION AVENUE
ANCHORAGE, AK 99502
(907) 269-0590

STATE OF ALASKA 49TH CHRISTOPHER J. BENTZ 12821 PROFESSIONAL ENGINEER
PS&E REVIEW
MARCH 2018

STATE OF ALASKA
DEPARTMENT OF TRANSPORTATION
AND PUBLIC FACILITIES

SEWARD HWY: MP17-22.5
REHABILITATION

SIGNING AND STRIPING:
STA 249+00 TO STA 259+00

DRAWING LOCATION	W:\PROJECTS\SEWARD HWY MP 17-22.5 REHABILITATION - 53610\CIV3D16\PLANSET
DRAWING LOCATION	53610_H_STRIPING PLAN SHEETS.DWG

DATE	TIME	LAYOUT	SCALE
3/8/2018	11:20 AM	249+00 TO 259+00	-----

DESIGNED BY	GSB
CHECKED BY	CLB
DRAFTED BY	WF

XREFS

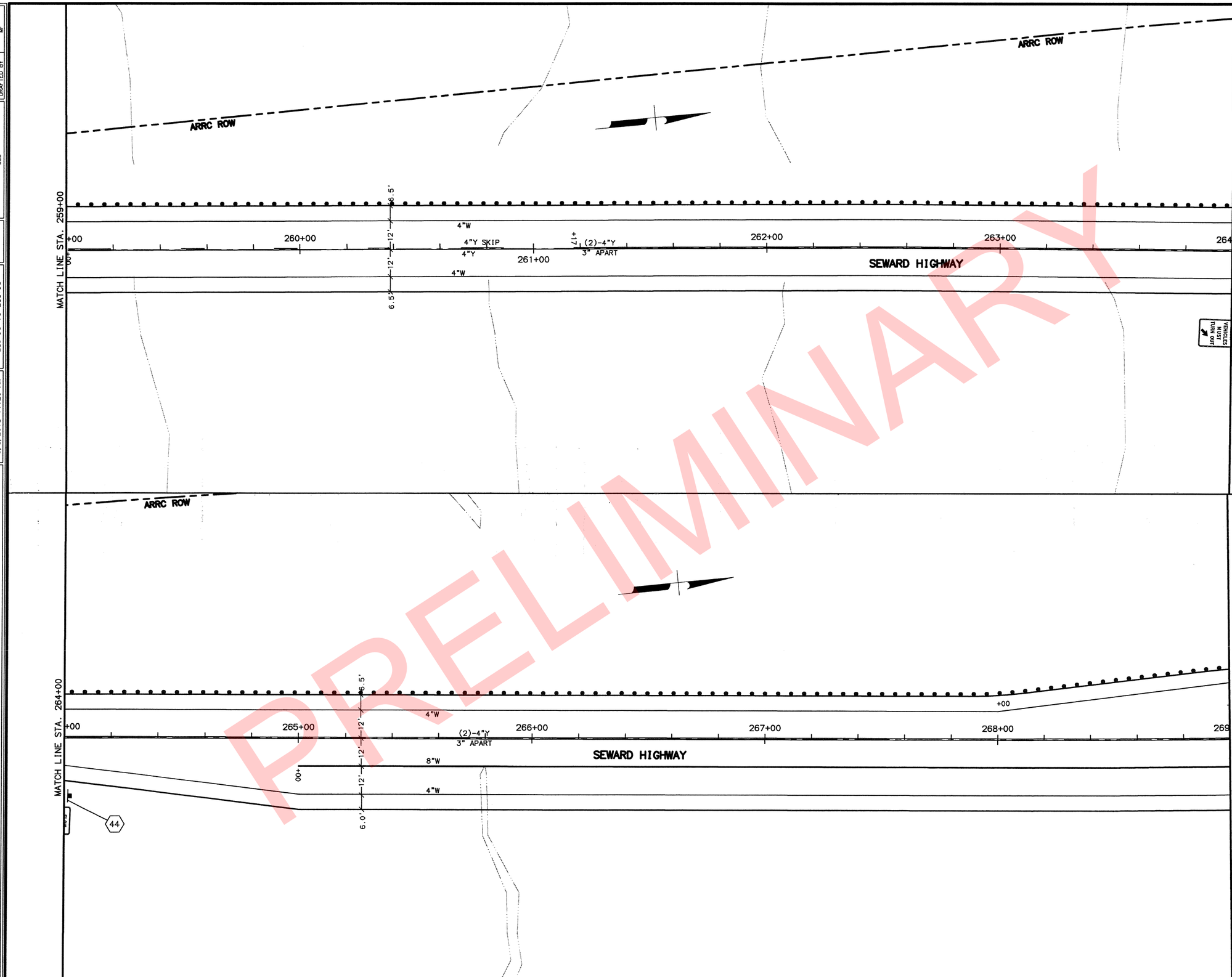

PRELIMINARY

SHEET NO.	TOTAL SHEETS
H20	H38
STATE	YEAR
ALASKA	2018

PROJECT DESIGNATION

311032/Z536100000

ADDENDUM NO.

ATTACHMENT NO.

REVISIONS

NO.	DATE	DESCRIPTION

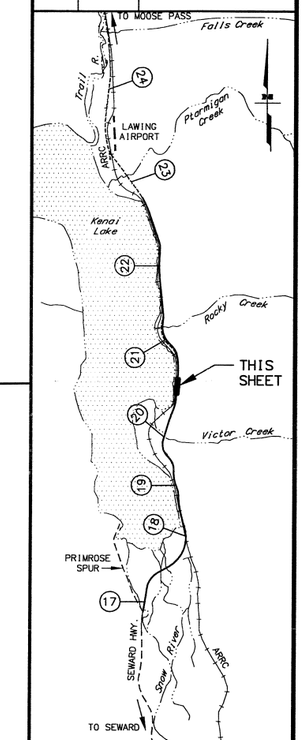

STATE OF ALASKA DOT&PF
4111 AVIATION AVENUE
ANCHORAGE, AK 99502
(907) 269-0590

STATE OF ALASKA
49TH
CHRISTOPHER BENTZ
12821
PROFESSIONAL ENGINEER
PS&E REVIEW
MARCH 2018

STATE OF ALASKA
DEPARTMENT OF TRANSPORTATION
AND PUBLIC FACILITIES

SEWARD HWY: MP17-22.5
REHABILITATION

SIGNING AND STRIPING:
STA 259+00 TO STA 269+00

DRAWING LOCATION	W:\PROJECTS\SEWARD HWY MP 17-22.5 REHABILITATION - 53610\CIV3D16\PLANSET
DRAWING LOCATION	53610_H_STRIPING PLAN SHEETS.DWG

DATE	TIME	LAYOUT	SCALE	XREFS	DESIGNED BY	CHECKED BY	DRAFTED BY
3/6/2018	11:20 AM	259+00 TO 269+00	-----	---	GSB	CLB	MF

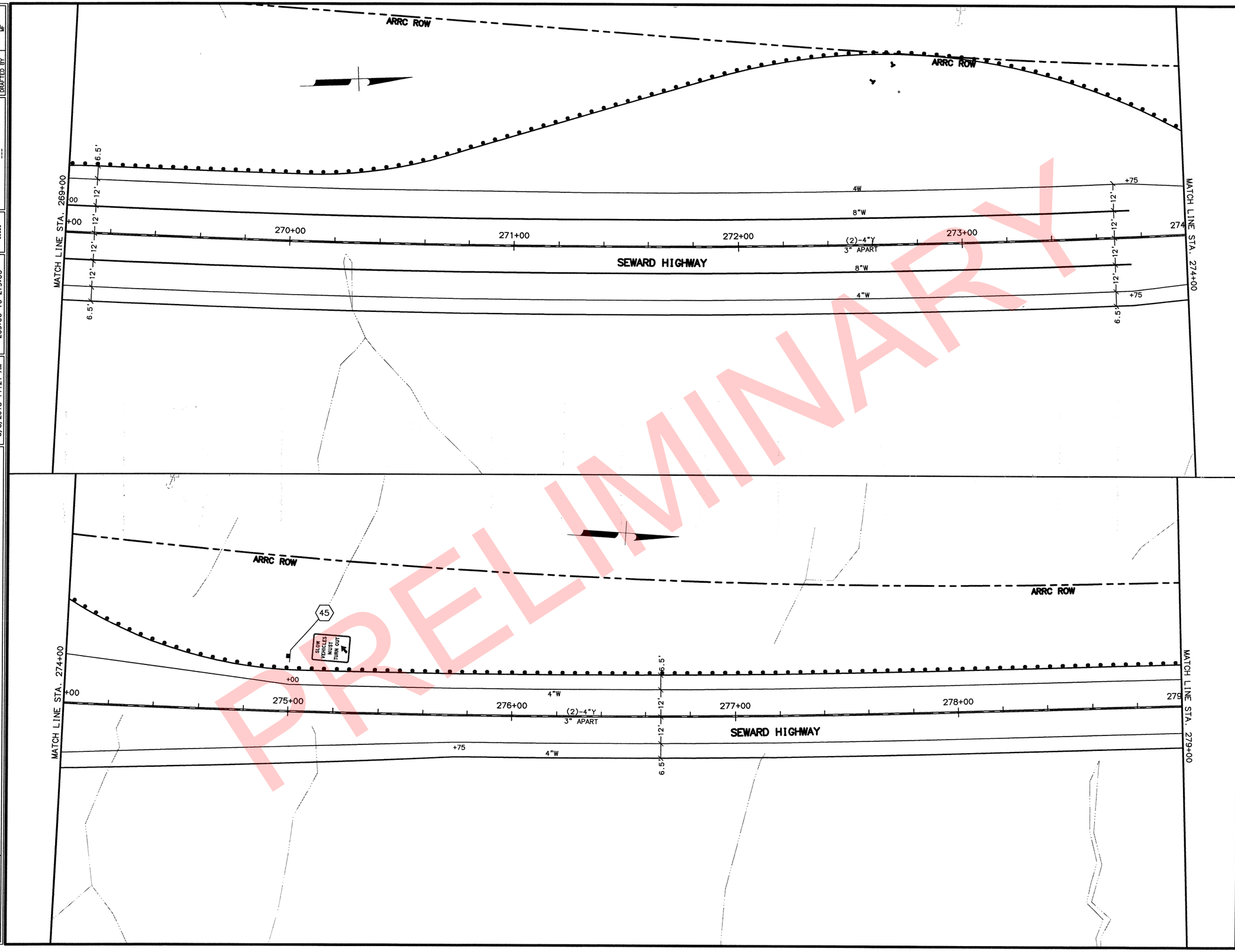

PRELIMINARY

SHEET NO.	TOTAL SHEETS
H21	H38
STATE	YEAR
ALASKA	2018

PROJECT DESIGNATION

311032/Z536100000

ADDENDUM NO.

ATTACHMENT NO.

REVISIONS

NO.	DATE	DESCRIPTION

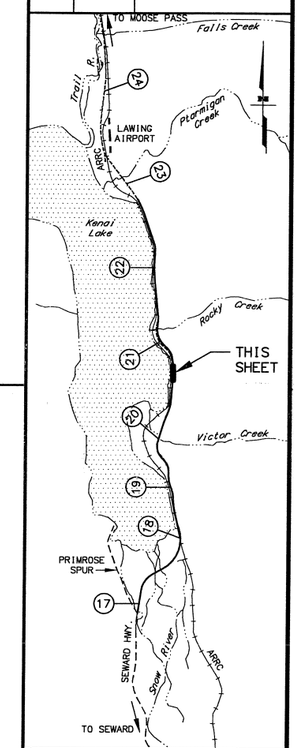

STATE OF ALASKA DOT&PF
4111 AVIATION AVENUE
ANCHORAGE, AK 99502
(907) 269-0590

STATE OF ALASKA 49TH CHRISTOPHER J. BENTZ 12821 REGISTERED PROFESSIONAL ENGINEER

PS&E REVIEW MARCH 2018

STATE OF ALASKA
DEPARTMENT OF TRANSPORTATION
AND PUBLIC FACILITIES

SEWARD HWY: MP17-22.5
REHABILITATION

SIGNING AND STRIPING:
STA 269+00 TO STA 279+00

DESIGNED BY	GSB
CHECKED BY	CLB
DRAFTED BY	MF
XREFS	----
SCALE	-----
LAYOUT	269+00 TO 279+00
DATE TIME	3/8/2018 11:21 AM
DRAWING LOCATION	W:\PROJECTS\SEWARD HWY MP 17-22.5 REHABILITATION - 53610\C1V3D16\PLANSET
DRAWING LOCATION	53610_H_STRIPING PLAN SHEETS.DWG

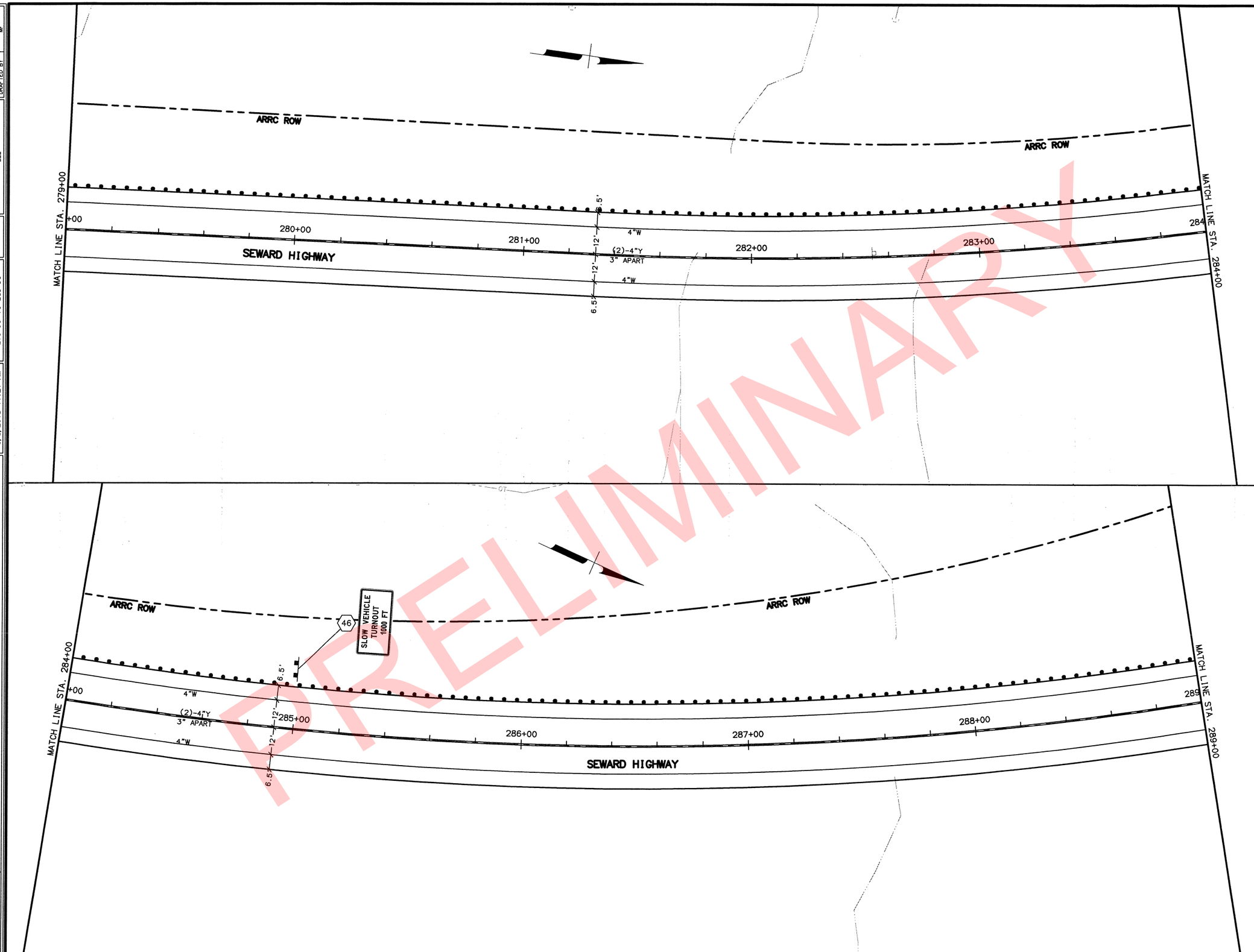

PRELIMINARY

SHEET NO.	TOTAL SHEETS
H22	H38
STATE	YEAR
ALASKA	2018

PROJECT DESIGNATION
311032/Z536100000

ADDENDUM NO.

ATTACHMENT NO.

REVISIONS

NO.	DATE	DESCRIPTION

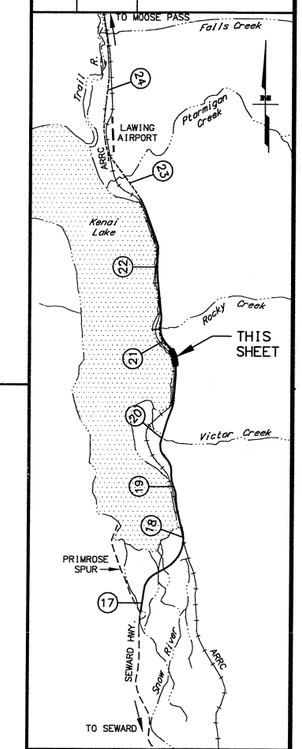

STATE OF ALASKA DOT&PF
4111 AVIATION AVENUE
ANCHORAGE, AK 99502
(907) 269-0590

STATE OF ALASKA 49TH CHRISTOPHER BENTZ 12821 PROFESSIONAL ENGINEER
PS&E REVIEW
MARCH 2018

STATE OF ALASKA
DEPARTMENT OF TRANSPORTATION
AND PUBLIC FACILITIES

SEWARD HWY: MP17-22.5
REHABILITATION

SIGNING AND STRIPING:
STA 279+00 TO STA 289+00

DRAWING LOCATION W:\PROJECTS\SEWARD HWY MP 17-22.5 REHABILITATION - 53610\C\V3D16\PLANSET
DRAWING LOCATION 53610_H_STRIPING PLAN SHEETS.DWG

DATE TIME 3/8/2018 11:21 AM
LAYOUT 279+00 TO 289+00
SCALE ----
XREFS --- ---
DESIGNED BY GSB
CHECKED BY CLB
DRAFTED BY WF

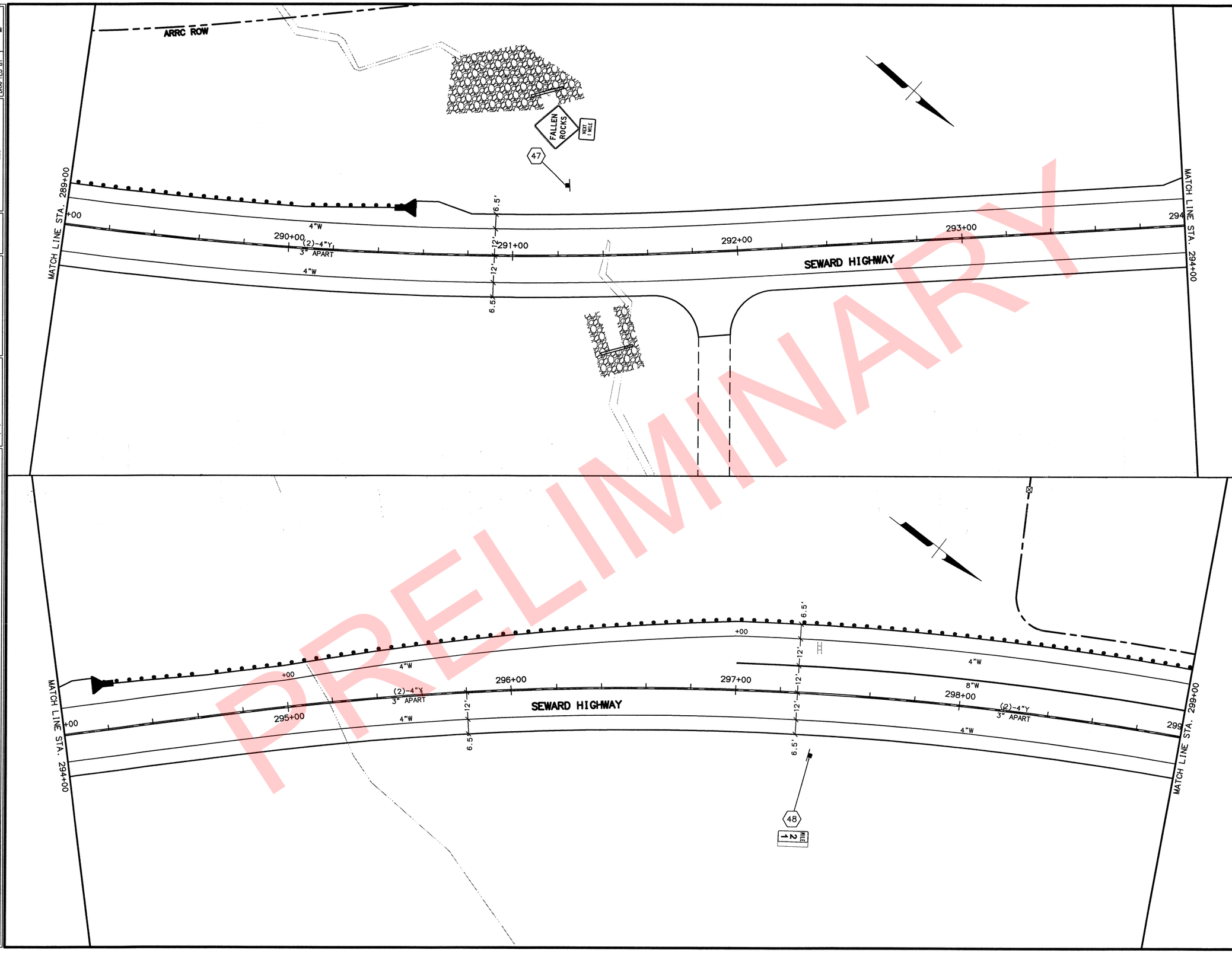

SHEET NO.	TOTAL SHEETS
H23	H38
STATE	YEAR
ALASKA	2018

PROJECT DESIGNATION

311032/Z536100000

ADDENDUM NO.

ATTACHMENT NO.

REVISIONS

NO.	DATE	DESCRIPTION

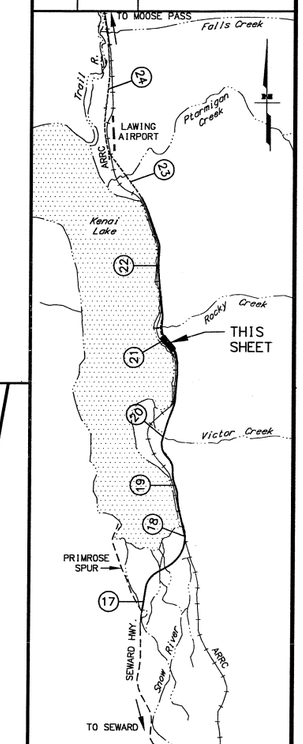

STATE OF ALASKA DOT&PF
4111 AVIATION AVENUE
ANCHORAGE, AK 99502
(907) 269-0590

STATE OF ALASKA
49TH
CHRISTOPHER BENTZ
12821
REGISTERED PROFESSIONAL ENGINEER
PS&E REVIEW
MARCH 2018

STATE OF ALASKA
DEPARTMENT OF TRANSPORTATION
AND PUBLIC FACILITIES

SEWARD HWY: MP17-22.5
REHABILITATION

SIGNING AND STRIPING:
STA 289+00 TO STA 299+00

DESIGNED BY GSB
CHECKED BY CLB
DRAFTED BY MF

XREFS ---

SCALE ----

LAYOUT 289+00 TO 299+00

DATE TIME 3/8/2018 11:21 AM

DRAWING LOCATION W:\PROJECTS\SEWARD HWY MP 17-22.5 REHABILITATION - 53610\CIV3D16\PLANSET
DRAWING LOCATION 53610_H_STRIPING PLAN SHEETS.DWG

PRELIMINARY

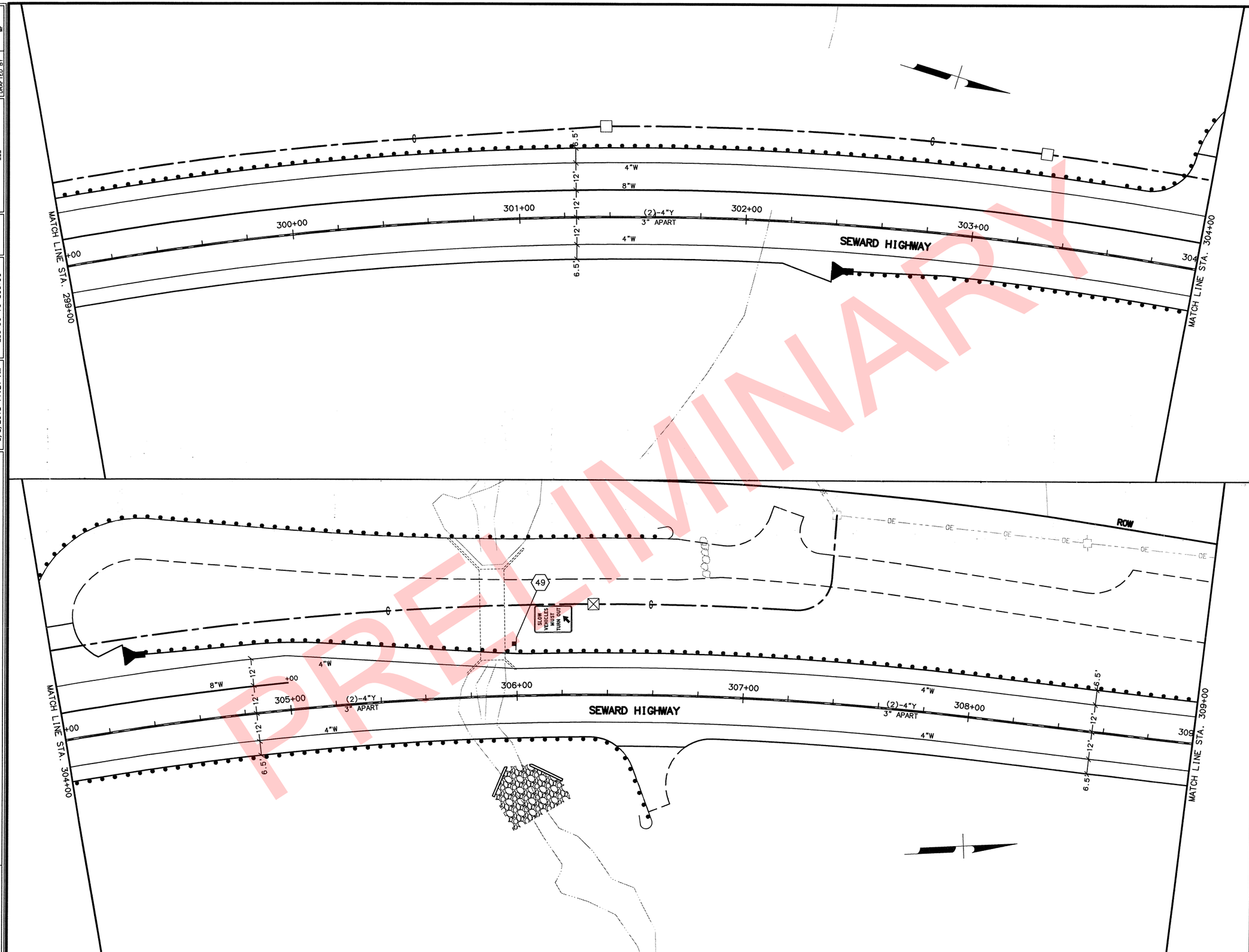

PRELIMINARY

SHEET NO.	TOTAL SHEETS
H24	H38
STATE	YEAR
ALASKA	2018

PROJECT DESIGNATION

311032/Z536100000

ADDENDUM NO.

ATTACHMENT NO.

REVISIONS

NO.	DATE	DESCRIPTION

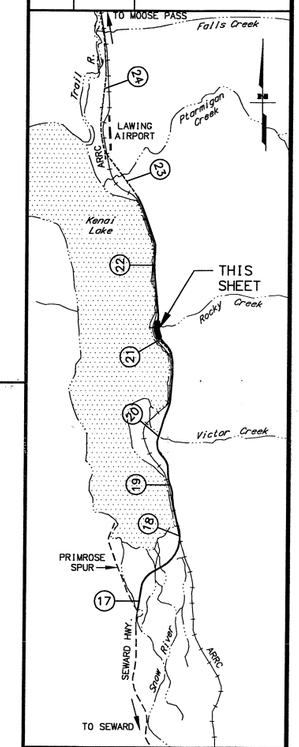

STATE OF ALASKA DOT&PF
4111 AVIATION AVENUE
ANCHORAGE, AK 99502
(907) 269-0590

STATE OF ALASKA
49TH
CHRISTOPHER L. BENTZ
2021
REGISTERED PROFESSIONAL ENGINEER

PS&E REVIEW
MARCH 2018

STATE OF ALASKA
DEPARTMENT OF TRANSPORTATION
AND PUBLIC FACILITIES

SEWARD HWY: MP17-22.5
REHABILITATION

SIGNING AND STRIPING:
STA 299+00 TO STA 309+00

DRAWING LOCATION	W:\PROJECTS\SEWARD HWY MP 17-22.5 REHABILITATION - 53610\CIV3D16\PLANSET
DRAWING LOCATION	53610_H_STRIPING PLAN SHEETS.DWG

DATE	TIME	LAYOUT	SCALE	XREFS	DESIGNED BY	CHECKED BY	DRAFTED BY
3/8/2018	11:21 AM	299+00 TO 309+00	-----	---	GSB	CLB	MF

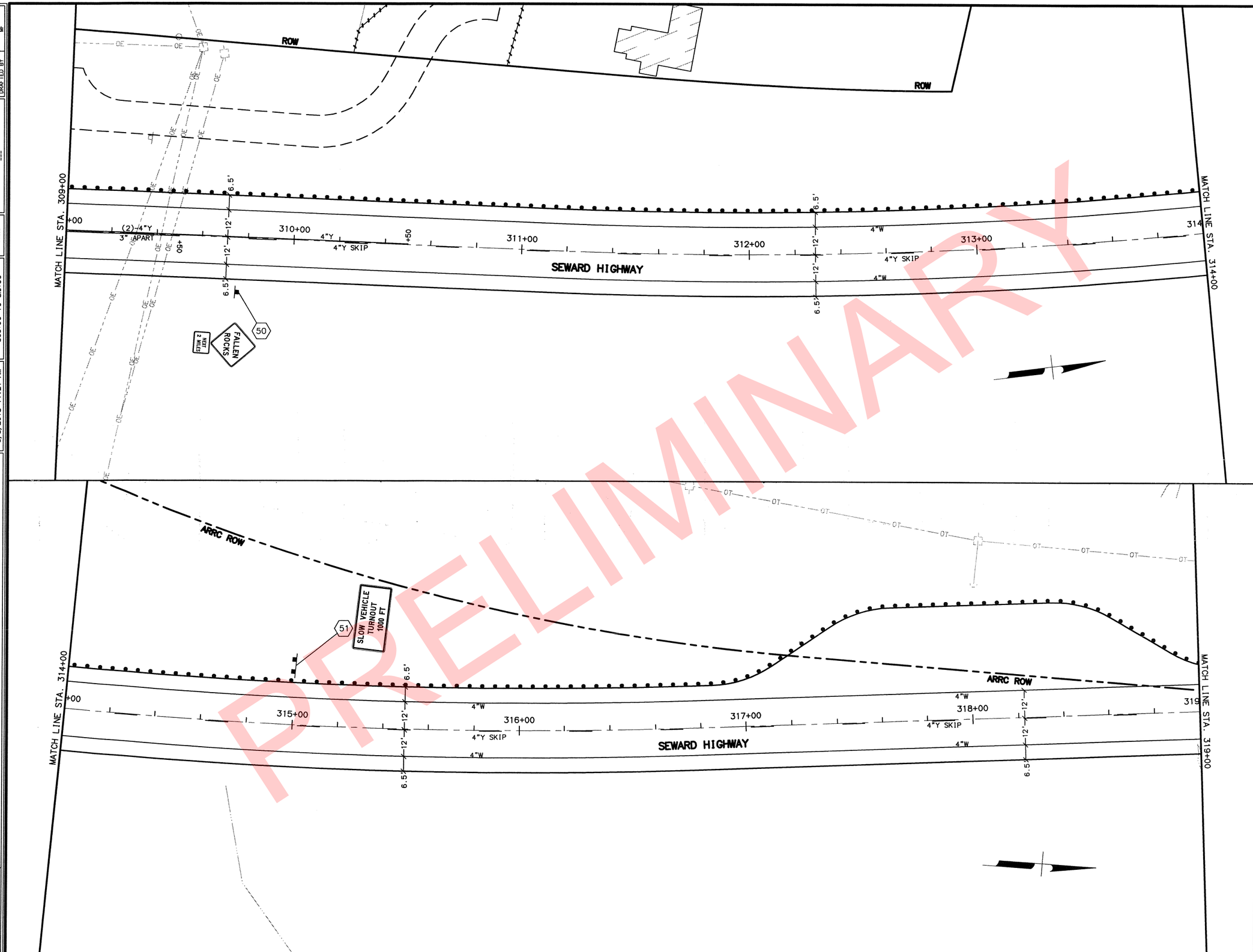

SHEET NO.	TOTAL SHEETS
H25	H38
STATE	YEAR
ALASKA	2018

PROJECT DESIGNATION

311032/Z536100000

ADDENDUM NO.

ATTACHMENT NO.

REVISIONS

NO.	DATE	DESCRIPTION

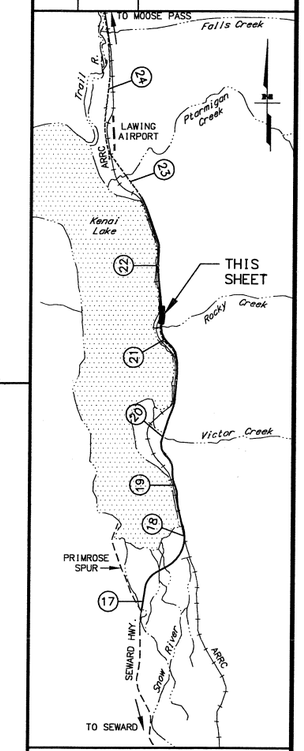

STATE OF ALASKA DOT&PF
4111 AVIATION AVENUE
ANCHORAGE, AK 99502
(907) 269-0590

STATE OF ALASKA
4973
CHRISTOPHER J. HONTZ
PROFESSIONAL ENGINEER

PS&E REVIEW
MARCH 2018

STATE OF ALASKA
DEPARTMENT OF TRANSPORTATION
AND PUBLIC FACILITIES

SEWARD HWY: MP17-22.5
REHABILITATION

SIGNING AND STRIPING:
STA 309+00 TO STA 319+00

DRAWING LOCATION	W:\PROJECTS\SEWARD HWY MP 17-22.5 REHABILITATION - 53610\C\IV3D16\PLANSET
DRAWING LOCATION	53610_H_STRIPING PLAN SHEETS.DWG

DATE	TIME	LAYOUT	SCALE
3/8/2018	11:21 AM	309+00 TO 319+00	-----

DESIGNED BY	GSB
CHECKED BY	CLB
DRAFTED BY	MF

XREFS

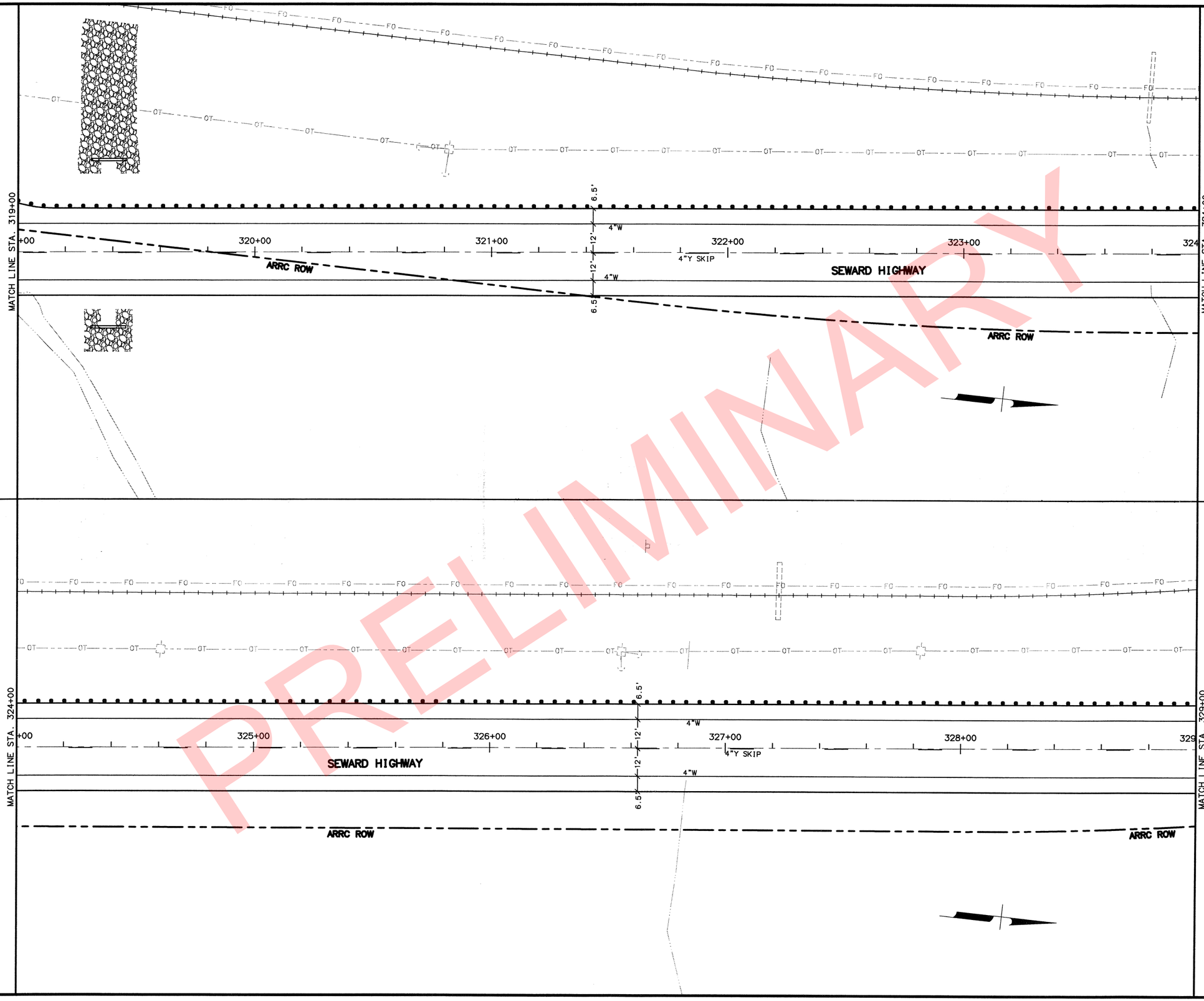

PRELIMINARY

SHEET NO.	TOTAL SHEETS
H26	H38
STATE	YEAR
ALASKA	2018

PROJECT DESIGNATION

311032/Z536100000

ADDENDUM NO.

ATTACHMENT NO.

REVISIONS

NO.	DATE	DESCRIPTION

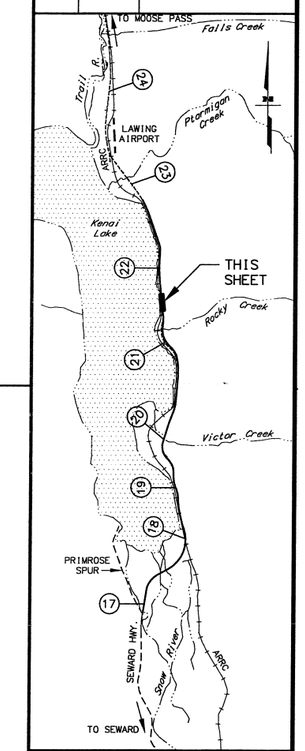

STATE OF ALASKA DOT&PF
4111 AVIATION AVENUE
ANCHORAGE, AK 99502
(907) 269-0590

STATE OF ALASKA
49TH
CHRISTOPHER L. BENTZ
2021
REGISTERED PROFESSIONAL ENGINEER

PS&E REVIEW
MARCH 2018

STATE OF ALASKA
DEPARTMENT OF TRANSPORTATION
AND PUBLIC FACILITIES

SEWARD HWY: MP17-22.5
REHABILITATION

SIGNING AND STRIPING:
STA 319+00 TO STA 329+00

DRAWING LOCATION	W:\PROJECTS\SEWARD HWY MP 17-22.5 REHABILITATION - 53610\CIV3D16\PLANSET
DRAWING LOCATION	53610_H_STRIPING PLAN SHEETS.DWG
DATE TIME	3/8/2018 11:21 AM
LAYOUT	319+00 TO 329+00
SCALE	-----
XREFS	--- ---
DESIGNED BY	GSB
CHECKED BY	CLB
DRAFTED BY	MF

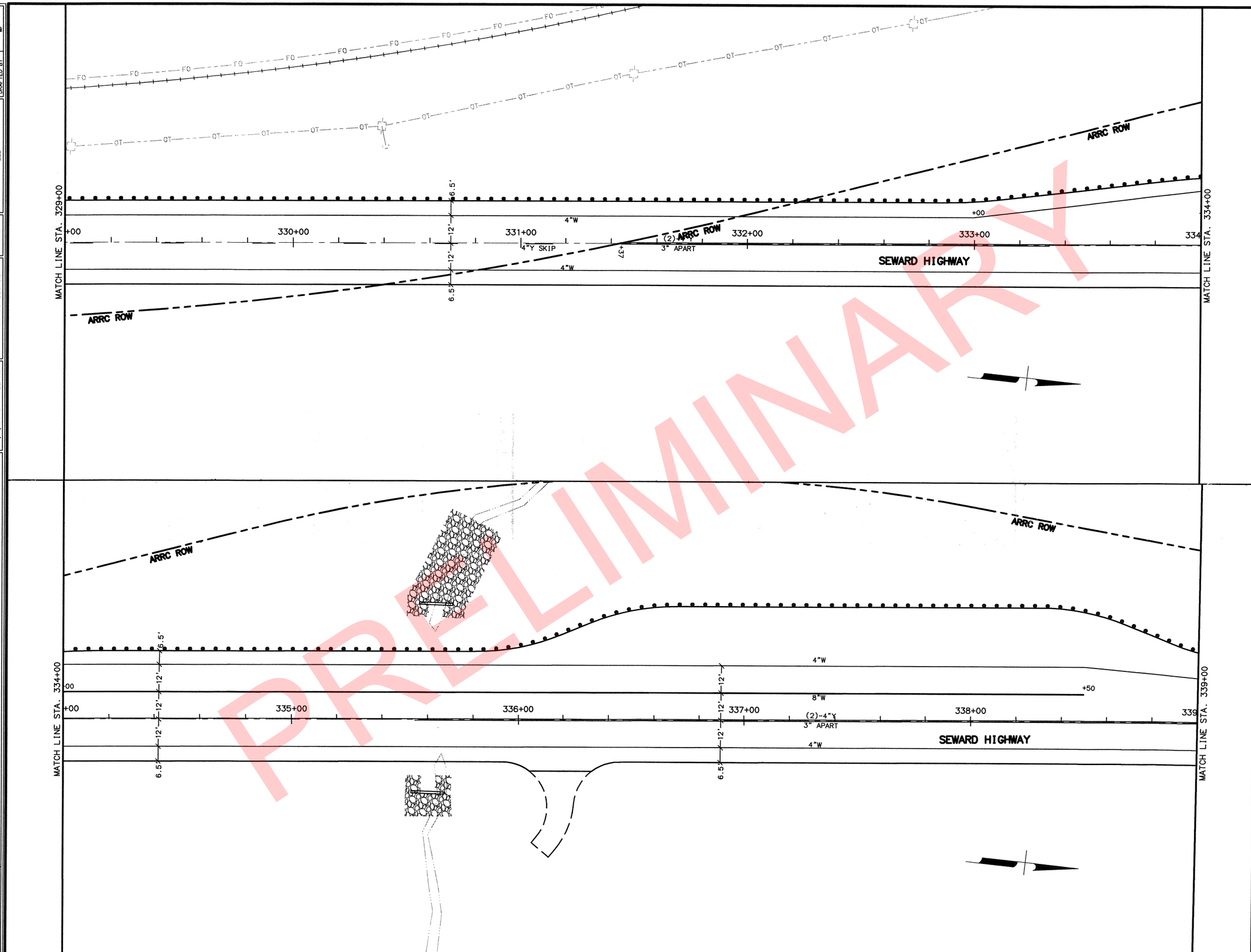

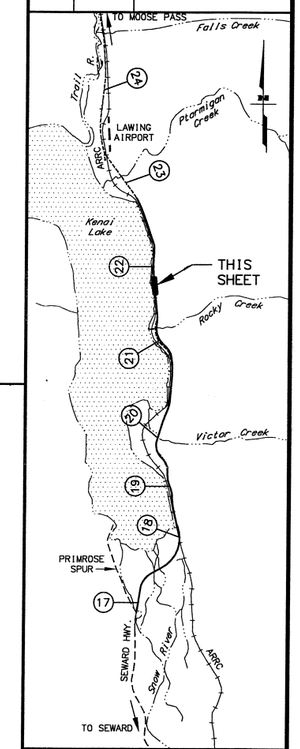

SHEET NO.	TOTAL SHEETS
H27	H38
STATE	YEAR
ALASKA	2018

PROJECT DESIGNATION

311032/Z536100000

ADDENDUM NO.

ATTACHMENT NO.

REVISIONS

NO.	DATE	DESCRIPTION

STATE OF ALASKA DOT&PF
4111 AVIATION AVENUE
ANCHORAGE, AK 99502
(907) 269-0590

STATE OF ALASKA
49TH
CHRISTOPHER BENTZ
12821
REGISTERED PROFESSIONAL ENGINEER

PS&E REVIEW
MARCH 2018

STATE OF ALASKA
DEPARTMENT OF TRANSPORTATION
AND PUBLIC FACILITIES

SEWARD HWY: MP17-22.5
REHABILITATION

SIGNING AND STRIPING:
STA 329+00 TO STA 339+00

DRAWING LOCATION	W:\PROJECTS\SEWARD HWY MP 17-22.5 REHABILITATION - 53610\CIV3D16\PLANSET
DRAWING LOCATION	53610_H_STRIPING PLAN SHEETS.DWG

DATE TIME	3/8/2018 11:22 AM
LAYOUT	329+00 TO 339+00
SCALE	-----
XREFS	--- ---
DESIGNED BY	GSB
CHECKED BY	CLB
DRAFTED BY	WF

PRELIMINARY

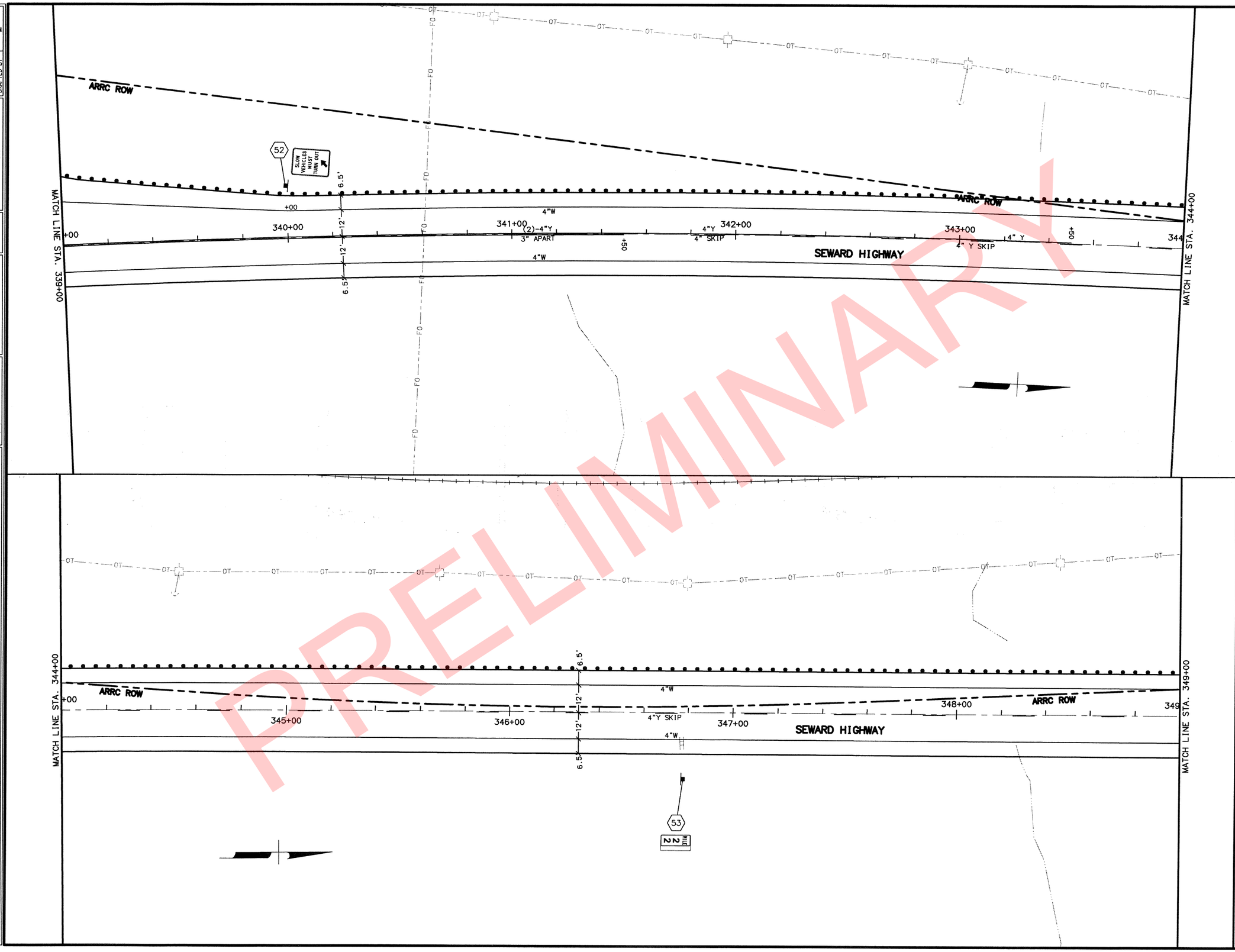

PRELIMINARY

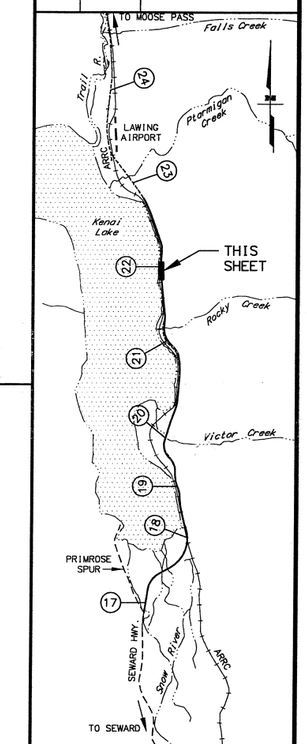

SHEET NO.	TOTAL SHEETS
H28	H38
STATE	YEAR
ALASKA	2018

PROJECT DESIGNATION

311032/Z536100000

ADDENDUM NO.

ATTACHMENT NO.

REVISIONS

NO.	DATE	DESCRIPTION

STATE OF ALASKA DOT&PF
4111 AVIATION AVENUE
ANCHORAGE, AK 99502
(907) 269-0590

STATE OF ALASKA
49TH
CHRISTOPHER GENTZ
42821
REGISTERED PROFESSIONAL ENGINEER

PS&E REVIEW
MARCH 2018

STATE OF ALASKA
DEPARTMENT OF TRANSPORTATION
AND PUBLIC FACILITIES

SEWARD HWY: MP17-22.5
REHABILITATION

SIGNING AND STRIPING:
STA 339+00 TO STA 349+00

DESIGNED BY GSB
CHECKED BY CLB
DRAFTED BY MF

XREFS

SCALE

LAYOUT
339+00 TO 349+00

DATE TIME
3/8/2018 11:22 AM

DRAWING LOCATION W:\PROJECTS\SEWARD HWY MP 17-22.5 REHABILITATION - 53610\CIV3D16\PLANSET
DRAWING LOCATION 53610_H_STRIPING PLAN SHEETS.DWG

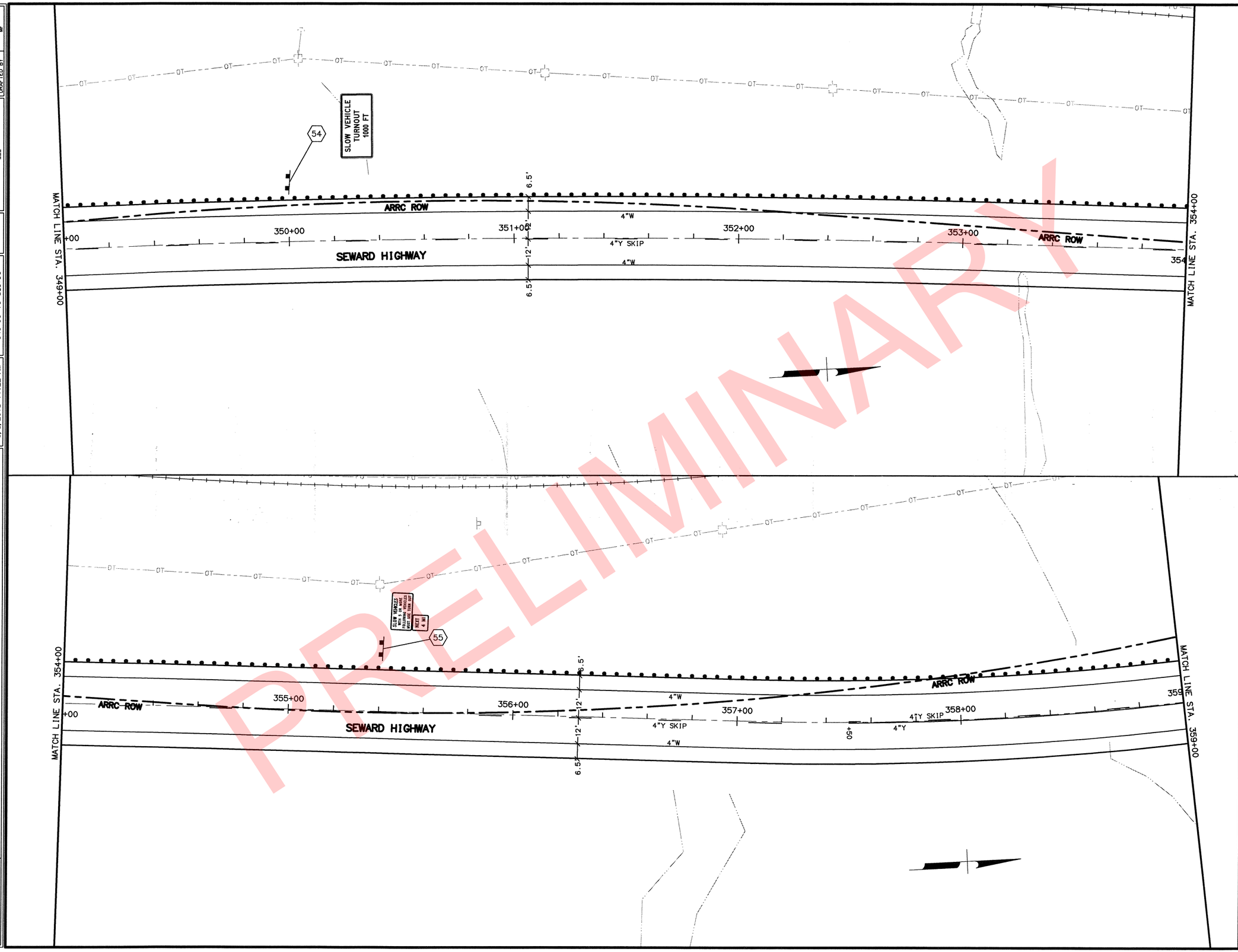

SHEET NO.	TOTAL SHEETS
H29	H38
STATE	YEAR
ALASKA	2018

PROJECT DESIGNATION

311032/Z536100000

ADDENDUM NO.

ATTACHMENT NO.

REVISIONS

NO.	DATE	DESCRIPTION

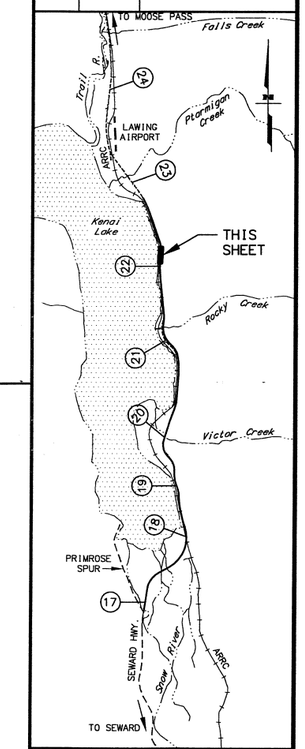

STATE OF ALASKA DOT&PF
4111 AVIATION AVENUE
ANCHORAGE, AK 99502
(907) 269-0590

STATE OF ALASKA 49TH CHRISTOPHER BENTZ 12821 PROFESSIONAL ENGINEER

PS&E REVIEW MARCH 2018

STATE OF ALASKA
DEPARTMENT OF TRANSPORTATION
AND PUBLIC FACILITIES

SEWARD HWY: MP17-22.5
REHABILITATION

SIGNING AND STRIPING:
STA 349+00 TO STA 359+00

DRAWING LOCATION W:\PROJECTS\SEWARD HWY MP 17-22.5 REHABILITATION - 53610\CIV3D16\PLANSET
DRAWING LOCATION 53610_H_STRIPING PLAN SHEETS.DWG

DATE TIME 3/8/2018 11:22 AM
LAYOUT 349+00 TO 359+00
SCALE ----
XREFS ---- ----
DESIGNED BY GSB
CHECKED BY CLB
DRAFTED BY MF

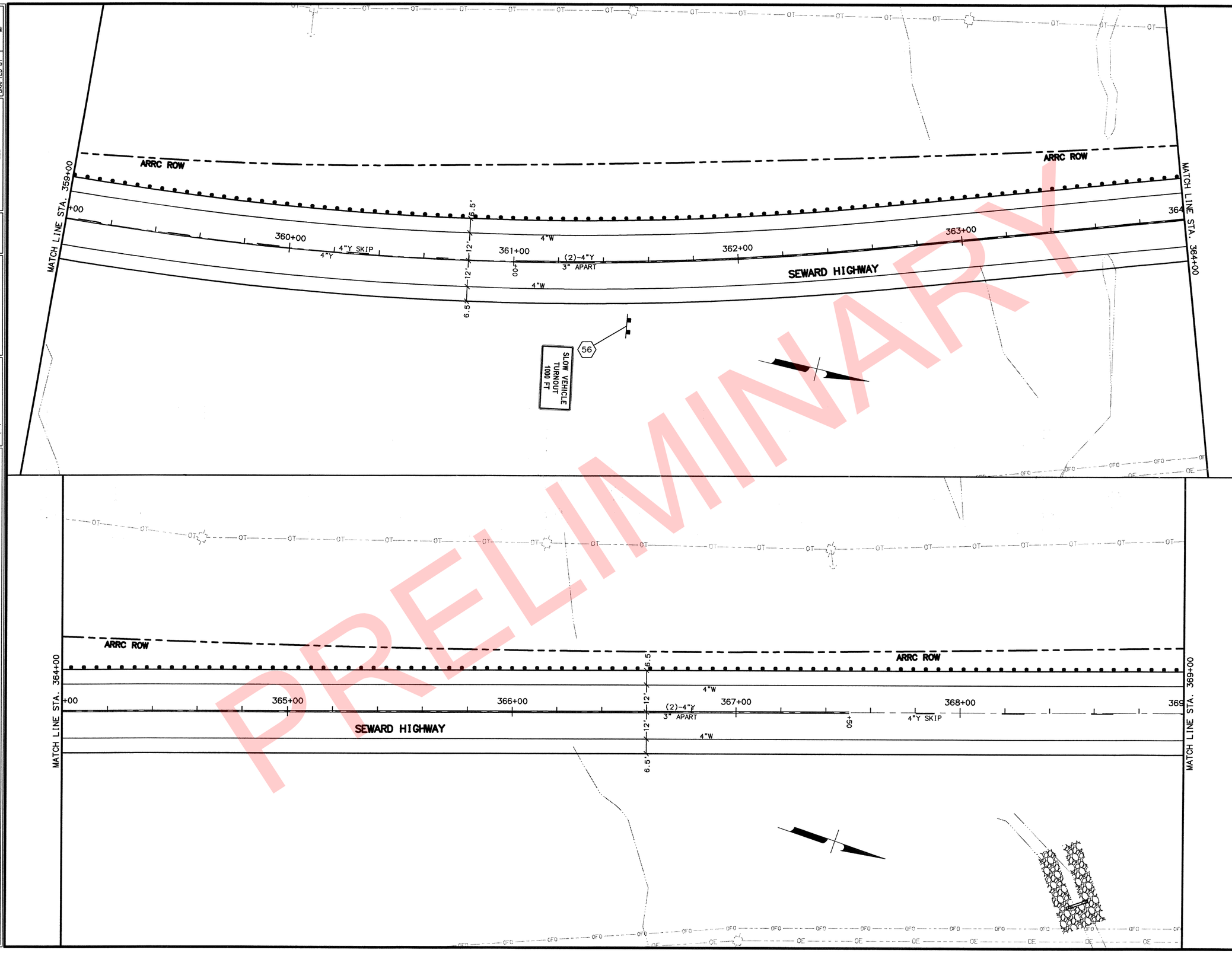

PRELIMINARY

SHEET NO.	TOTAL SHEETS
H30	H38
STATE	YEAR
ALASKA	2018

PROJECT DESIGNATION
311032/Z536100000

ADDENDUM NO.

ATTACHMENT NO.

REVISIONS

NO.	DATE	DESCRIPTION

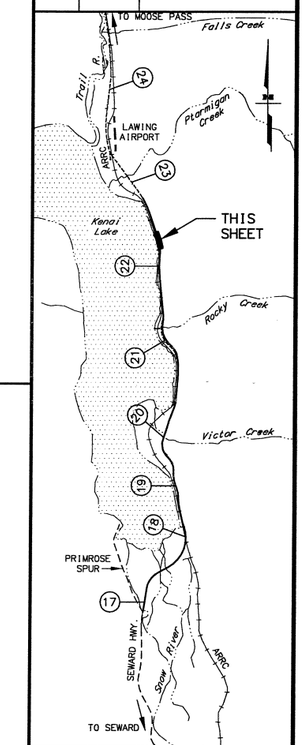

STATE OF ALASKA DOT&PF
4111 AVIATION AVENUE
ANCHORAGE, AK 99502
(907) 269-0590

STATE OF ALASKA 49TH CHRISTOPHER SENTZ 12821 PROFESSIONAL ENGINEER
PS&E REVIEW
MARCH 2018

STATE OF ALASKA
DEPARTMENT OF TRANSPORTATION
AND PUBLIC FACILITIES

SEWARD HWY: MP17-22.5
REHABILITATION

SIGNING AND STRIPING:
STA 359+00 TO STA 369+00

DRAWING LOCATION	W:\PROJECTS\SEWARD HWY MP 17-22.5 REHABILITATION - 53610\CIV3D16\PLANSET
DRAWING LOCATION	53610_H_STRIPING PLAN SHEETS.DWG

DATE TIME	LAYOUT	SCALE	XREFS	DESIGNED BY	CHECKED BY	DRAFTED BY
3/8/2018 11:22 AM	359+00 TO 369+00	-----	--- --- ---	GSB	CLB	WF

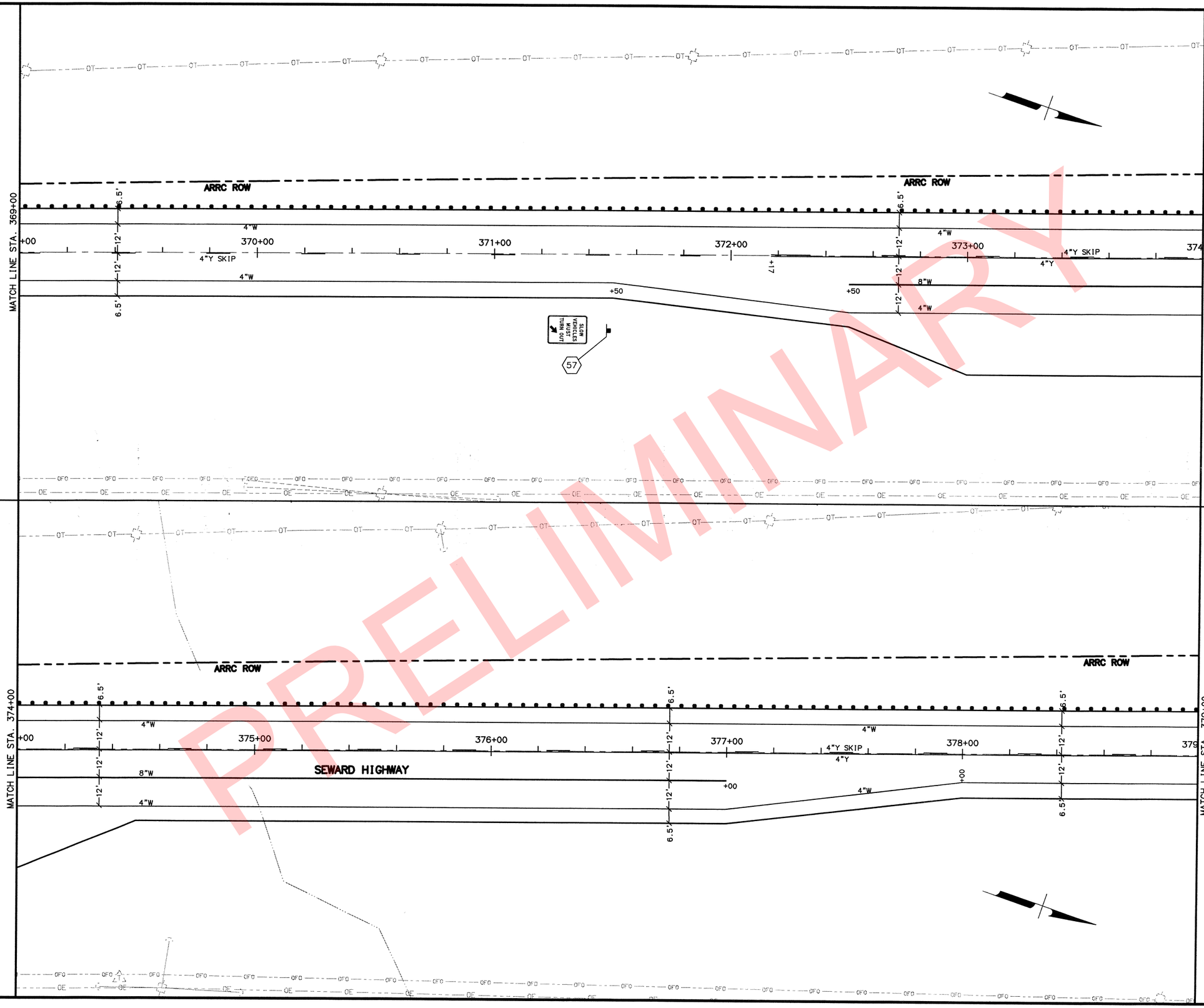

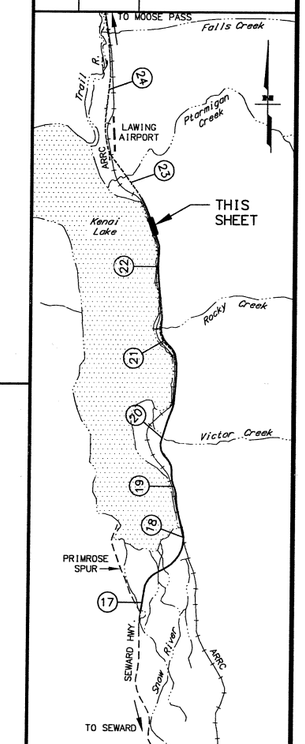

SHEET NO.	TOTAL SHEETS
H31	H38
STATE	YEAR
ALASKA	2018

PROJECT DESIGNATION

311032/Z536100000

ADDENDUM NO.

ATTACHMENT NO.

REVISIONS

NO.	DATE	DESCRIPTION

STATE OF ALASKA DOT&PF
4111 AVIATION AVENUE
ANCHORAGE, AK 99502
(907) 269-0590

STATE OF ALASKA
49TH
CHRISTOPHER J. BENTZ
12821
REGISTERED PROFESSIONAL ENGINEER

PS&E REVIEW
MARCH 2018

STATE OF ALASKA
DEPARTMENT OF TRANSPORTATION
AND PUBLIC FACILITIES

SEWARD HWY: MP17-22.5
REHABILITATION

SIGNING AND STRIPING:
STA 369+00 TO STA 379+00

DESIGNED BY GSB
CHECKED BY CLB
DRAFTED BY MF

XREFS ----

SCALE ----

LAYOUT 369+00 TO 379+00

DATE TIME 3/8/2018 11:22 AM

DRAWING LOCATION W:\PROJECTS\SEWARD HWY MP 17-22.5 REHABILITATION - 53610\CIV3D16\PLANSET
DRAWING LOCATION 53610_H_STRIPING PLAN SHEETS.DWG

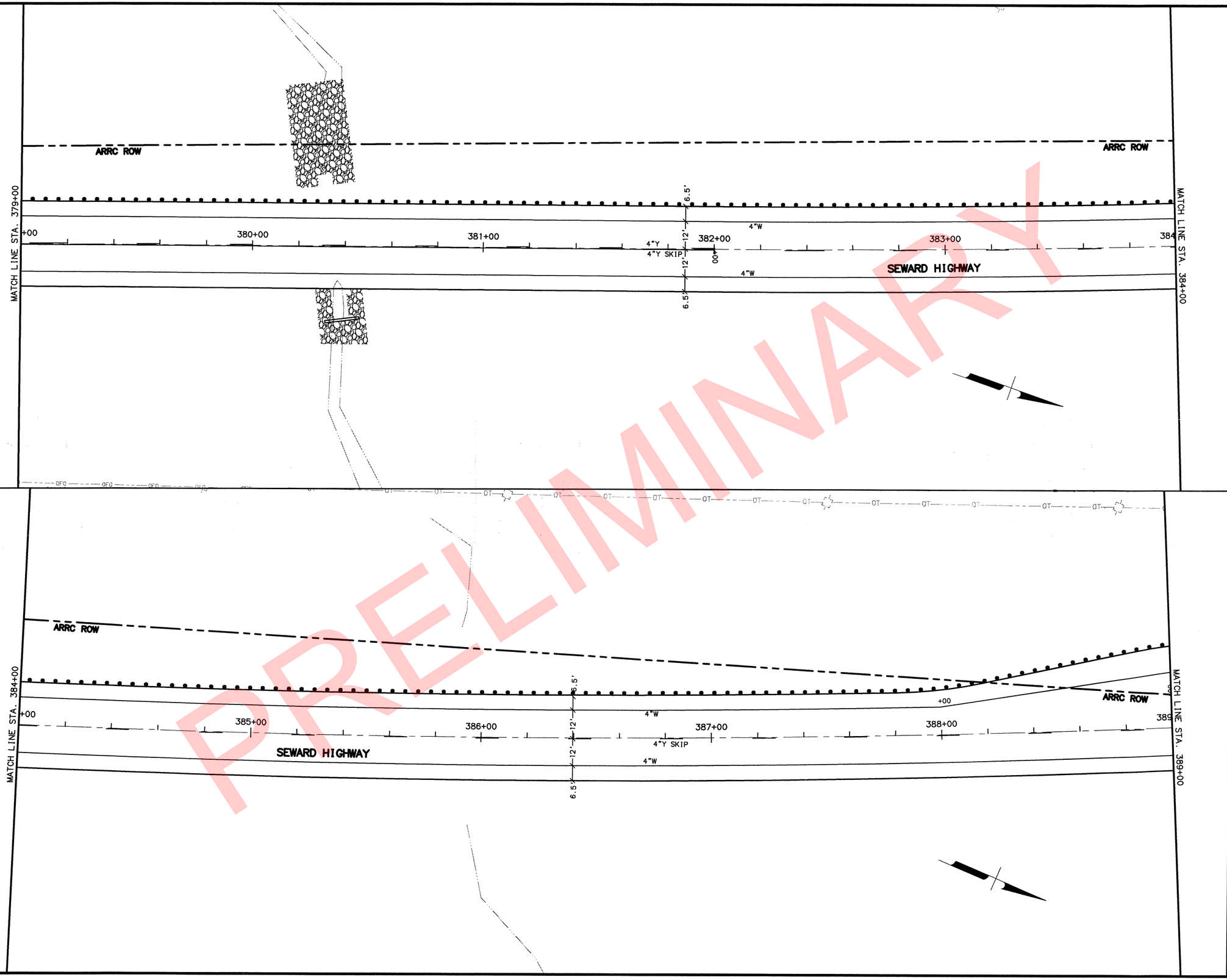

PRELIMINARY

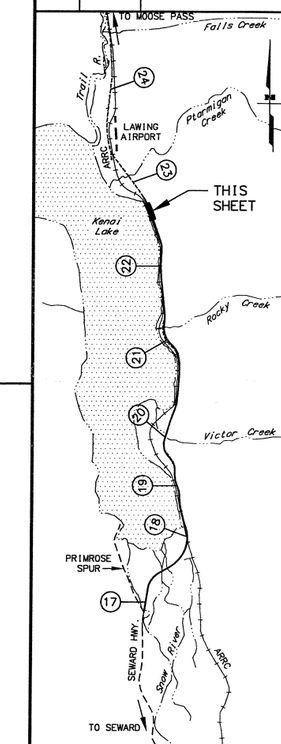

SHEET NO.	TOTAL SHEETS
H32	H38
STATE	YEAR
ALASKA	2018

PROJECT DESIGNATION

311032/Z536100000

ADDENDUM NO.

ATTACHMENT NO.

REVISIONS

NO.	DATE	DESCRIPTION

STATE OF ALASKA DOT&PF
4111 AVIATION AVENUE
ANCHORAGE, AK 99502
(907) 269-0590

STATE OF ALASKA
49TH
PS&E REVIEW
MARCH 2018
PROFESSIONAL ENGINEER

STATE OF ALASKA
DEPARTMENT OF TRANSPORTATION
AND PUBLIC FACILITIES

SEWARD HWY: MP17-22.5
REHABILITATION

SIGNING AND STRIPING:
STA 379+00 TO STA 389+00

DESIGNED BY GSB
CHECKED BY CLB
DRAFTED BY MF

XREFS

SCALE ----

LAYOUT 379+00 TO 389+00

DATE TIME 3/8/2018 11:22 AM

DRAWING LOCATION W:\PROJECTS\SEWARD HWY MP 17-22.5 REHABILITATION - 53610\CIV3D16\PLANSET
DRAWING LOCATION 53610_H_STRIPING PLAN SHEETS.DWG

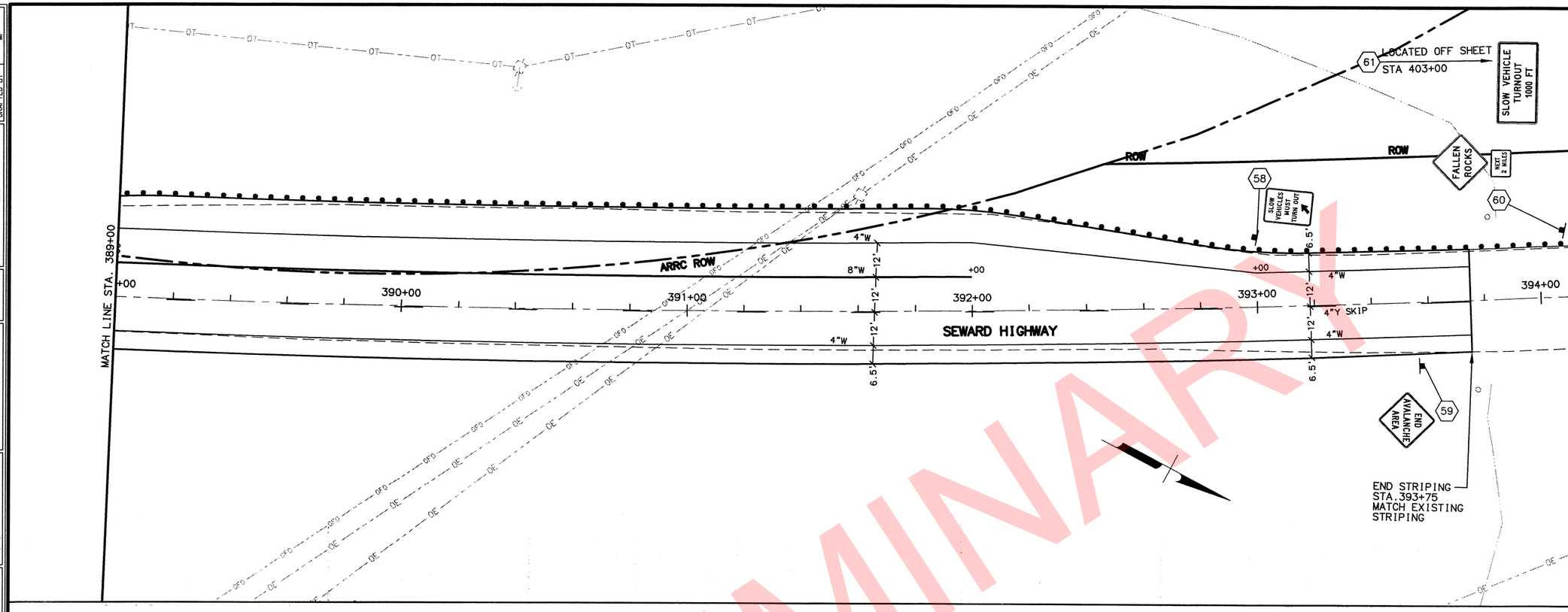

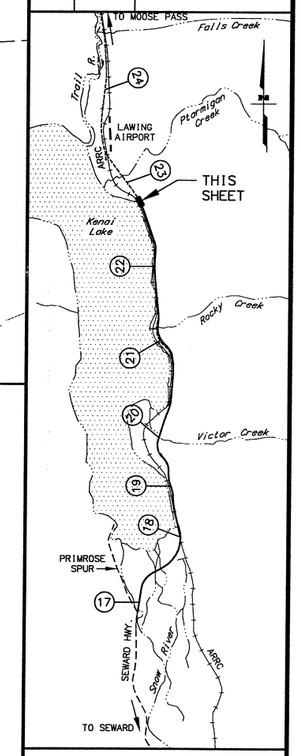

SHEET NO.	TOTAL SHEETS
H33	H38
STATE	YEAR
ALASKA	2018

PROJECT DESIGNATION

311032/Z536100000

ADDENDUM NO.

ATTACHMENT NO.

REVISIONS

NO.	DATE	DESCRIPTION

STATE OF ALASKA DOT&PF
4111 AVIATION AVENUE
ANCHORAGE, AK 99502
(907) 269-0590

STATE OF ALASKA 49TH CHRISTOPHER L. BENTZ 12821 REGISTERED PROFESSIONAL ENGINEER

PS&E REVIEW MARCH 2018

STATE OF ALASKA
DEPARTMENT OF TRANSPORTATION
AND PUBLIC FACILITIES

SEWARD HWY: MP17-22.5
REHABILITATION

SIGNING AND STRIPING:
STA 389+00 TO STA 393+75

DRAWING LOCATION	W:\PROJECTS\SEWARD HWY MP 17-22.5 REHABILITATION - 53610\CIV3D16\PLANSET
DRAWING LOCATION	53610_HLSTRIPING PLAN SHEETS.DWG

DATE	TIME	LAYOUT	SCALE	XREFS	DESIGNED BY	CHECKED BY	DRAFTED BY
3/8/2018	11:23 AM	389+00 TO 393+75	----	---	GSB	CLB	MF

PRELIMINARY

REVISIONS		
NO.	DATE	DESCRIPTION

STATE	PROJECT DESIGNATION	YEAR	SHEET NO.	TOTAL SHEETS
ALASKA	311032/Z536100000	2018	H34	H38

SIGN SUMMARY

PAGE NO.	SIGN NO.	STATION ALIGNMENT	CL REF	TYPE	LEGEND	SIZE (IN) WIDTH	SIZE (IN) HEIGHT	AREA (SQ.FT)	SIGN FACES	POSTS NO., SIZE, & TYPE	FRAMED? YES	FRAMED? NO	REMARKS
H4	1		RT	D7-205	Primrose Campground	96	24	16.00	S	2-3.0"T	X		SEE SHEET H4 FOR LOCATION PER ENGINEERS APPROVAL.
				D7-RM-010 D7-RL-100 D7-RW-080		96	24	16.00			X		BUILD AS A SINGLE PANEL
H4	2	99+40.0	RT	D7-RM-010		24	24	4.00	S	1-2.5" PT		X	
				D9-301		24	6	1.00			X		
H4	3	99+56.0	LT	D3-1	Seward Hwy	36	8	4.00	N/S	1-3.0" T	X		2 SIGNS BACK TO BACK
				D3-1	Primrose Spur	48	12	8.00	E/W		X		2 SIGNS BACK TO BACK
				R1-1	STOP	30	30	6.25	W			X	
H4	4	100+23.6	RT	OM3-R		12	36	3.00	S	1-2.5" PT		X	
H4	5	100+26.0	LT	D7-RM-010		24	24	4.00	N	1-2.5" PT		X	
				D9-301		24	6	1.00				X	
H4	6	100+55.7	LT	OM3-L		12	36	3.00	S	1-2.5" PT		X	
H4	7	102+40.3	RT	OM3-R		12	36	3.00	N	1-2.5" PT		X	
H4	8	102+71.7	LT	OM3-L		12	36	3.00	N	1-2.5" PT		X	
H4	9	103+70.2	LT	W2-2R		36	36	9.00	N	1-3.0" T	X		
H4	10	105+18.4	LT	D7-205	Primrose Campground	96	24	16.00	N	2-3.0"T	X		
				D7-RM-010 D7-RL-100 D7-RW-080		96	24	16.00			X		BUILD AS A SINGLE PANEL
H4	11	106+04.5	RT		ADOPT A HIGHWAY				S	1-2.5" PT			RELOCATE EXISTING SIGNS ON NEW POST AND FOUNDATION
					SNOW RIVER HOSTEL								
				D10-202	MILE 17	14	27	2.63	N/S			X	
H4	12	108+75.2	RT	D2-3	Soldotna 75 Anchorage 110 Homer 151	96	48	32.00	S	2-3.0" T	X		
H5	13	112+20.5	RT	R2-1	SPEED LIMIT 55	24	30	5.00	S	3.0" T		X	
H5	14	112+20.5	LT	R2-1	SPEED LIMIT 55	24	30	5.00	N	3.0" T		X	
H6	15	119+18.4	LT	R4-6A	PASSING LANE 1/2 MILE	36	48	12.00	N	1-3.0" T	X		
H6	16	128+78.1	LT	OM3-L		12	36	3.00	W	1-2.5" PT		X	

PRELIMINARY

STATE OF ALASKA 49TH ★ PS&E REVIEW MARCH 2018 REGISTERED PROFESSIONAL ENGINEER

STATE OF ALASKA DOT&PF
4111 AVIATION AVENUE
ANCHORAGE, AK 99502
(907) 269-0590

STATE OF ALASKA
DEPARTMENT OF TRANSPORTATION
AND PUBLIC FACILITIES

SEWARD HWY: MP17-22.5
REHABILITATION

SIGN SUMMARY

DESIGNED BY GSB
CHECKED BY CLB
DRAFTED BY MF
XREFS ---
SCALE ----
LAYOUT H34 SIGN SUMMARY
DATE TIME 3/8/2018 11:25 AM
DRAWING LOCATION W:\PROJECTS\SEWARD HWY MP 17-22.5 REHABILITATION - 53610\CIV3D16\PLANSET
DRAWING LOCATION 53610_H_SIGN SUMMARY TABLES.DWG

REVISIONS		
NO.	DATE	DESCRIPTION

STATE	PROJECT DESIGNATION	YEAR	SHEET NO.	TOTAL SHEETS
ALASKA	311032/Z536100000	2018	H35	H38

SIGN SUMMARY

PAGE NO.	SIGN NO.	STATION ALIGNMENT	CL REF	TYPE	LEGEND	SIZE (IN) WIDTH	SIZE (IN) HEIGHT	AREA (SQ.FT)	SIGN FACES	POSTS NO., SIZE, & TYPE	FRAMED? YES	FRAMED? NO	REMARKS
H6	17	128+82.5	RT	I-3	Snow River	24	18	3.00	W	1-2.5" PT		X	
				OM3-R		12	36	3.00				X	
H7	18	135+72.8	LT	I-3	Snow River	24	18	3.00	E	1-2.5" PT		X	
				OM3-L		12	36	3.00				X	
H7	19	135+74.0	RT	OM3-R		12	36	3.00	E	1-2.5" PT		X	
H8	20	140+45.4	LT	W16-111	END AVALANCHE AREA	36	36	9.00	N	1-3.0" T	X		
H8	21	140+49.3	RT	W11-112	AVALANCHE AREA NEXT 1 MILES DO NOT STOP	90	48	30.00	S	2-3.0" T	X		FOLDING SIGN, SEE H38
H8	22	144+20.0	RT	R4-12	SLOW VEHICLES WITH 5 OR MORE FOLLOWING VEHICLES MUST USE TURN OUT	72	42	21.00	N	2-3.0" T	X		
				W7-3AP	NEXT 4 MILES	24	18	3.00				X	WHITE BACKGROUND WITH BLACK LETTERING
H9	23	157+76.1	RT	W8-14	FALLEN ROCKS	36	36	9.00	N	1-3.0" T	X		
				W7-3aP	NEXT 1 MILES	24	18	3.00				X	
H10	24	160+42.7	RT	D10-202	MILE 18	14	27	2.63	N/S	1-2.5" PT		X	
H10	25	168+49.3	LT	R4-14	SLOW VEHICLES MUST TURN OUT	30	42	8.75	N	1-3.0" T		X	
H11	26	178+60.4	LT	I-122	SLOW VEHICLE TURNOUT 1000 FT	72	36	18.00	N	2-3.0" T	X		
H13	27	194+29.5	LT	R4-14	SLOW VEHICLES MUST TURN OUT	30	42	8.75	N	1-3.0" T		X	
H13	28	195+09.6	RT	D10-202	MILE 19	14	27	2.63	N/S	1-2.5" PT		X	
H14	29	202+59.1	LT	W16-112	AVALANCHE AREA NEXT 1 MILES DO NOT STOP	90	48	30.00	N	2-3.0" T	X		FOLDING SIGN, SEE H38
H14	30	202+60.4	RT	W16-111	END AVALANCHE AREA	36	36	9.00	S	1-3.0" T	X		
H14	31	204+42.4	LT	I-122	SLOW VEHICLE TURNOUT 1000 FT	72	36	18.00	N	2-3.0" T	X		
H15	32	209+25.0	LT	W8-14	FALLEN ROCKS	36	36	9.00	N	1-3.0" T	X		
				W7-3aP	NEXT 1 MILES	24	18	3.00				X	
H16	33	228+00.0	RT	D7-205	Victor Creek Trail	96	24	16.00	S	2-3.0" T	X		
				D7-RL-100 D7-RM-010		96	24	16.00			X		BUILD AS A SINGLE PANEL
H17	34	229+29.8	RT	I-3	Victor Creek	24	18	3.00	S	1-2.5" T		X	
				D10-202	MILE 20	14	27	2.63	N/S			X	

PRELIMINARY

STATE OF ALASKA 49TH PROFESSIONAL ENGINEER PS&E REVIEW MARCH 2018

STATE OF ALASKA DOT&PF
4111 AVIATION AVENUE
ANCHORAGE, AK 99502
(907) 269-0590

STATE OF ALASKA
DEPARTMENT OF TRANSPORTATION
AND PUBLIC FACILITIES

SEWARD HWY: MP17-22.5
REHABILITATION

SIGN SUMMARY

DESIGNED BY GSB
CHECKED BY CLB
DRAFTED BY MF
XREFS ---
SCALE ----
LAYOUT H35 SIGN SUMMARY
DATE TIME 3/8/2018 11:26 AM
DRAWING LOCATION W:\PROJECTS\SEWARD HWY MP 17-22.5 REHABILITATION - 53610\CIV3D16\PLANSET
DRAWING LOCATION 53610_H_SIGN SUMMARY TABLES.DWG

REVISIONS		
NO.	DATE	DESCRIPTION

STATE	PROJECT DESIGNATION	YEAR	SHEET NO.	TOTAL SHEETS
ALASKA	311032/Z536100000	2018	H36	H38

SIGN SUMMARY

PAGE NO.	SIGN NO.	STATION ALIGNMENT	CL REF	TYPE	LEGEND	SIZE (IN) WIDTH	SIZE (IN) HEIGHT	AREA (SQ.FT)	SIGN FACES	POSTS NO., SIZE, & TYPE	FRAMED? YES	FRAMED? NO	REMARKS
H17	35	231+78.6	LT	I-3	Victor Creek	24	18	3.00	N	1-2.5" T		X	
H17	36	231+87.6	RT	D7-RL-100		24	24	4.00	S	1-3.0" T		X	
				D7-RM-010		24	6	1.00				X	
H17	37	232+99.7	RT	R1-1	STOP	30	30	6.25	E	1-3.0" T		X	
H17	38	233+83.6	LT	D7-RL-100		24	24	4.00	N	1-3.0" T		X	
				D7-RM-010		24	6	1.00				X	
H17	39	238+00.0	LT	D7-205	Victor Creek Trail	96	24	16.00	N	2-3.0" T	X		
				D7-RL-100 D7-RM-010		96	24	16.00			X		BUILD AS A SINGLE PANEL
H18	40	245+75.1	RT	W8-14	FALLEN ROCKS	36	36	9.00	S	1-3.0" T	X		
				W7-3aP	NEXT 1 MILES	24	18	3.00				X	
H18	41	248+17.1	LT	W16-111	END AVALANCHE AREA	36	36	9.00	N	1-3.0" T	X		
H18	42	248+21.3	RT	W16-112	AVALANCHE AREA NEXT 3 MILES DO NOT STOP	90	48	30.00	S	2-3.0" T	X		FOLDING SIGN, SEE H38
H19	43	254+00.0	RT	I-122	SLOW VEHICLE TURNOUT 1000 FT	72	36	18.00	S	2-3.0" T	X		
H20	44	264+00.6	RT	R4-14	SLOW VEHICLES MUST TURN OUT	30	42	8.75	S	1-3.0" T		X	
H21	45	275+00.4	LT	R4-14	SLOW VEHICLES MUST TURN OUT	30	42	8.75	N	1-3.0" T	X		
H22	46	284+99.7	LT	I-122	SLOW VEHICLE TURNOUT 1000 FT	72	36	18.00	N	2-3.0" T	X		
H23	47	291+24.3	LT	W8-14	FALLEN ROCKS	36	36	9.00	N	1-3.0" T	X		
				W7-3aP	NEXT 1 MILES	24	18	3.00				X	
H23	48	297+34.7	RT	D10-202	MILE 2 1	14	27	2.63	N/S	1-2.5" PT		X	
H24	49	306+00.2	LT	R4-14	SLOW VEHICLES MUST TURN OUT	30	42	8.75	N	1-3.0" T		X	
H25	50	309+76.1	RT	W8-14	FALLEN ROCKS	36	36	9.00	S	1-3.0"T	X		
				W7-3AP	NEXT 2 MILES	24	18	3.00				X	
H25	51	315+00.4	LT	I-122	SLOW VEHICLE TURNOUT 1000 FT	72	36	18.00	N	2-3.0" T	X		
H28	52	340+00.6	LT	R4-14	SLOW VEHICLES MUST TURN OUT	30	42	8.75	N	1-3.0" T		X	
H28	53	346+99.7	RT	D10-202	MILE 2 2	14	27	2.63	N/S	1-2.5" PT		X	

PRELIMINARY

STATE OF ALASKA 49TH CHRISTOPHER L. BENTZ 12821 PROFESSIONAL ENGINEER
PS&E REVIEW MARCH 2018

STATE OF ALASKA DOT&PF
4111 AVIATION AVENUE
ANCHORAGE, AK 99502
(907) 269-0590

STATE OF ALASKA
DEPARTMENT OF TRANSPORTATION
AND PUBLIC FACILITIES

SEWARD HWY: MP17-22.5
REHABILITATION

SIGN SUMMARY

DRAWING LOCATION | W:\PROJECTS\SEWARD HWY MP 17-22.5 REHABILITATION - 53610\C1V3D16\PLANSET
DRAWING LOCATION | 53610_H_SIGN SUMMARY TABLES.DWG

DATE TIME 3/8/2018 11:26 AM
LAYOUT H36 SIGN SUMMARY
SCALE ----
XREFS ---
DESIGNED BY GSB
CHECKED BY CLB
DRAFTED BY MF

REVISIONS		
NO.	DATE	DESCRIPTION

STATE	PROJECT DESIGNATION	YEAR	SHEET NO.	TOTAL SHEETS
ALASKA	311032/Z536100000	2018	H37	H38

SIGN SUMMARY

PAGE NO.	SIGN NO.	STATION ALIGNMENT	CL REF	TYPE	LEGEND	SIZE (IN) WIDTH	SIZE (IN) HEIGHT	AREA (SQ.FT)	SIGN FACES	POSTS NO., SIZE, & TYPE	FRAMED? YES	FRAMED? NO	REMARKS
H29	54	350+00.6	LTRT	I-122	SLOW VEHICLE TURNOUT 1000 FT	72	36	18.00	N	2-3.0" T	X		
H29	55	355+41.3	LT	R4-12	SLOW VEHICLES WITH 5 OR MORE FOLLOWING VEHICLES MUST USE TURN OUT	72	42	21.00	N	2-3.0" T	X		
				W7-3AP	NEXT 4 MILES	24	18	3.00				X	WHITE BACKGROUND WITH BLACK LETTERING
H30	56	361+49.9	RT	I-122	SLOW VEHICLE TURNOUT 1000 FT	72	36	18.00	S	2-3.0" T	X		
H31	57	371+49.5	RT	R4-14	SLOW VEHICLES MUST TURN OUT	30	42	8.75	S	1-3.0" T		X	
H33	58	392+99.1	LT	R4-14	SLOW VEHICLES MUST TURN OUT	30	42	8.75	N	1-3.0" T		X	
H33	59	393+57.2	RT	W16-111	END AVALANCHE AREA	36	36	9.00	S	1-3.0" T	X		
H33	60	394+08.9	LT	W8-14	FALLEN ROCKS	36	36	9.00	N	1-3.0" T	X		
				W7-3AP	NEXT 2 MILES	24	18	3.00				X	
H33	61	403+00.0	LT	I-122	SLOW VEHICLE TURNOUT 1000 FT	72	36	18.00	N	2-3.0" T	X		
VICTOR CREEK TRAILHEAD													
G9	62	1+03.8	RT	R2-1	SPEED LIMIT 10	24	30	5.00	W	1-2.5" PT		X	
G9	63	1+77.8	LT	W6-3		30	30	6.25	E	1-2.5" PT		X	
G9	64	1+89.4	RT	R4-7B	KEEP RIGHT	24	30	5.00	W	1-2.5" PT		X	
G9	65	4+30.9	RT	D9-6		18	18	2.25	N	1-2.5" PT		X	
				D9-6P	VAN ACCESSIBLE	18	9	1.13				X	
G9	66	5+85.5	LT	R4-7B	KEEP RIGHT	24	30	5.00	N	1-2.5" PT		X	

PRELIMINARY

DESIGNED BY GSB
CHECKED BY CLB
DRAFTED BY MF

XREFS ---

SCALE -----

LAYOUT H37 SIGN SUMMARY

DATE TIME 3/8/2018 12:48 PM

DRAWING LOCATION W:\PROJECTS\SEWARD HWY MP 17-22.5 REHABILITATION - 53610\CIV3D16\PLANSET
DRAWING LOCATION 53610_H_SIGN SUMMARY TABLES.DWG

STATE OF ALASKA
DEPARTMENT OF TRANSPORTATION
AND PUBLIC FACILITIES

STATE OF ALASKA DOT&PF
4111 AVIATION AVENUE
ANCHORAGE, AK 99502
(907) 269-0590

PS&E REVIEW
MARCH 2018

SEWARD HWY: MP17-22.5
REHABILITATION

SIGN SUMMARY

REVISIONS		
NO.	DATE	DESCRIPTION

STATE	PROJECT DESIGNATION	YEAR	SHEET NO.	TOTAL SHEETS
ALASKA	311032/Z536100000	2018	H38	H38

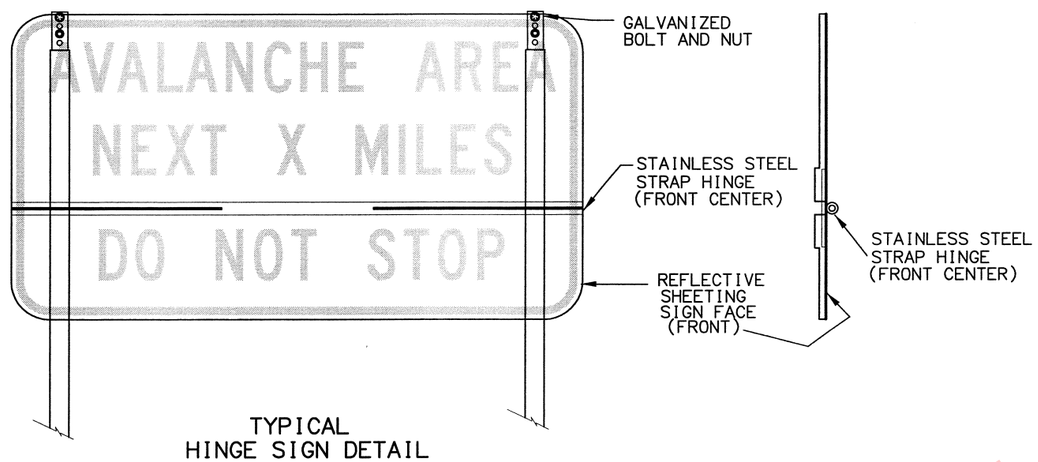

TYPICAL HINGE SIGN DETAIL

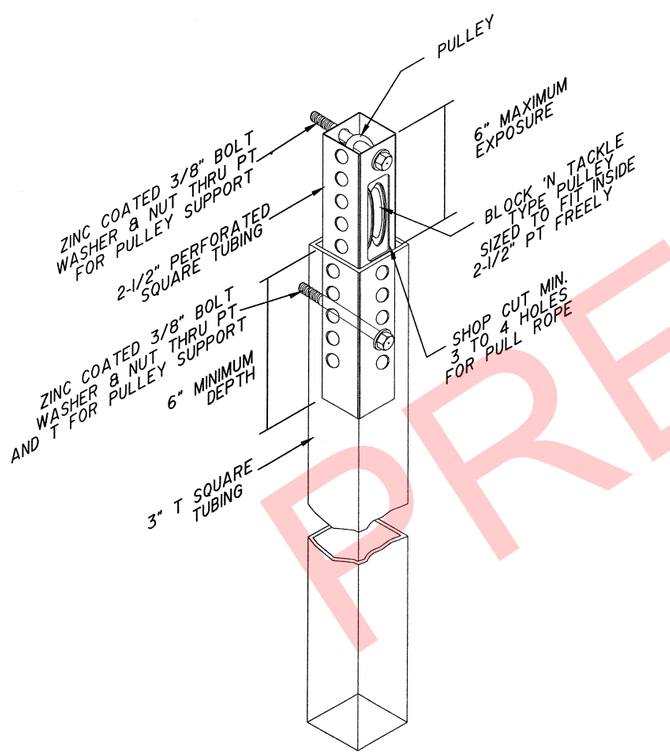

PT, T AND PULLEY DETAIL

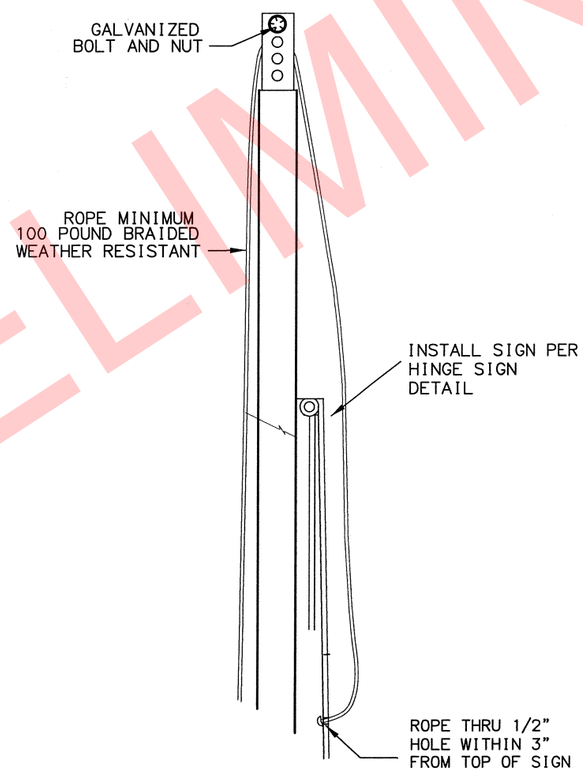

ROPE DETAIL

SALVAGE SIGN SUMMARY

STATION	CL REF	TYPE	LEGEND	REMARKS
99+54.9	LT	D3-1	PRIMROSE SPUR	
		R1-1	STOP	
100+23.6	RT	OM3-L		
100+57.7	LT	OM3-R		
102+40.3	RT	OM3-R		
102+71.9	LT	OM3-L		
104+21.9	LT			POST ONLY NO SIGN
106+06.4	RT		ADOPT A HIGHWAY	RE-INSTALL ON NEW POST
			SNOW RIVER HOSTEL	
		D10-102	MILE 17	2 SIGNS BACK TO BACK
108+75.9	RT	D2-3	CITY OF KENAI	
			ANCHORAGE	
			HOMER	
112+18.2	RT	R2-1	SPEED LIMIT 55	
114+95.7	LT	RL-100	TRAIL	
		D7-RM-010	CAMPING	
		D9-304	1500 FT	
122+77.1	LT	R4-6	TRUCK LANE	
128+65.9	RT	W16-112	AVALANCHE AREA	
128+77.9	LT	OM3-L		
128+82.4	RT	OM3-R		
135+72.8	RT	OM3-R		
135+73.8	LT	OM3-L		
140+45.7	LT	W16-111		
160+43.8	RT	D10-102	MILE 18	2 SIGNS BACK TO BACK
195+09.5	RT	D10-102	MILE 19	2 SIGNS BACK TO BACK
203+59.2	LT	W16-112	AVALANCHE AREA	
205+42.6	RT	W16-111	END AVALANCHE	
217+32.7	RT	RL-100	TRAIL	
		D9-304	1500 FT	
217+67.6	RT	W1-2R	CURVE RIGHT	
		W13-1	45 MPH	
218+40.5	LT	W1-8R/L	CHEVRON	2 SIGNS BACK TO BACK
220+51.8	LT	W1-8R/L	CHEVRON	2 SIGNS BACK TO BACK
222+32.7	LT	W1-8R/L	CHEVRON	2 SIGNS BACK TO BACK
223+83.8	LT	W1-8R/L	CHEVRON	2 SIGNS BACK TO BACK
225+05.7	LT	W1-8R/L	CHEVRON	2 SIGNS BACK TO BACK
225+07.3	RT	W1-2L	CURVE LEFT	
228+60.0	RT	D7-105	VICTOR TRAIL	
229+50.2	LT	OM3-L		
229+50.5	RT	OM3-R		
231+49.5	LT	OM3-R		
231+50.9	RT	OM3-L		
231+74.1	LT	I-3	VICTOR CREEK	
233+84.6	LT	D7-105	VICTOR TRAIL	
246+93.9	LT	RL-100	HIKERS	
		D9-304	1500 FT	
247+80.5	LT	W16-111	END AVALANCHE	
248+23.1	RT	W16-112	AVALANCHE AREA	
282+53.9	RT	W1-4L	WINDING CURVE	
297+36.4	RT	D10-102	MILE 21	
309+34.9	LT	W1-4R	WINDING CURVE	
346+77.1	RT	D10-102	MILE 22	

PRELIMINARY

STATE OF ALASKA 49TH PS&E REVIEW MARCH 2018 HISTORICAL BENTZ 2821 REGISTERED PROFESSIONAL ENGINEER

STATE OF ALASKA DOT&PF
4111 AVIATION AVENUE
ANCHORAGE, AK 99502
(907) 269-0590

STATE OF ALASKA
DEPARTMENT OF TRANSPORTATION
AND PUBLIC FACILITIES

SEWARD HWY: MP17-22.5
REHABILITATION

SIGN SUMMARY

DESIGNED BY GSB
CHECKED BY CLB
DRAFTED BY MF

XREFS

SCALE

LAYOUT
H38 SIGN SUMMARY

DATE TIME
3/8/2018 11:27 AM

DRAWING LOCATION W:\PROJECTS\SEWARD HWY MP 17-22.5 REHABILITATION - 53610\CIV3016\PLANSET
DRAWING LOCATION 53610_H_SIGN SUMMARY TABLES.DWG

STATE	PROJECT DESIGNATION	YEAR	SHEET NO.	TOTAL SHEETS
ALASKA	Z536100000	2018	N01	

BRIDGE BASIS OF ESTIMATE

ITEM NO.	ITEM	PAY UNIT	ESTIMATING UNIT	SNOW RIVER WEST CHANNEL #603	SNOW RIVER CENTER CHANNEL #605	TOTAL
201(1B)	Clearing	LS	AC	0.5	---	0.5
203(115)	Debris Removal/Excavation	LS	DAY	---	3	3
501(1)	Class A Concrete	LS	CY	71.1	117.6	188.7
503(1A)	Reinforcing Steel	LS	LBS	12,100	37,000	49,100
503(1B)	Reinforcing Steel	LS	LBS	3,000	16,000	19,000
503(2)	Epoxy-Coated Reinforcing Steel	LS	LBS	25,000	25,280	50,280
503(3)	Drill and Bond Dowels	EA	EA	256	774	1,030
507(112)	Steel Bridge Post and Railing Replacement	LF	LF	417	1,333	1,750
513(1)	Field Painting of Steel Structures	LS	SF	200	---	200
516(1)	Expansion Joint (Compression Seal)	LF	LF	103	273	376
519(1)	Bridge Deck Repair	SF	SF	1,625	3,500	5,125
525(102)	Polyester Concrete Overlay	LS	CF	520	1,785	2,305
606(16)	Transition Rail	EA	EA	4	4	8
642(3)	Three Person Survey Party	HR	HR	10	32.5	42.5

Item numbers are for reference only. Quantities shown are not necessarily the pay quantities nor the total quantity of the particular item.

GENERAL NOTES

DESIGN:..... AASHTO LRFD Bridge Design Specifications, 2017 Edition, with latest interim specifications.

Seismic design per US Federal Highway Administration Seismic Retrofitting Manual for Highway Bridges 1995.

LIVE LOAD:..... HL-93

SEISMIC PARAMETERS:..... PGA = 0.52
S_s = 1.20
S_1 = 0.50
Site Class = D
Liquefaction Potential = High
AASHTO 7% probability of exceedance in 75 years.

REINFORCEMENT:..... ASTM A706, Grade 60, Fy = 60,000 psi
ASTM A970 Headed bars, Class HA
Space reinforcement evenly unless otherwise noted.

CONCRETE:..... Class A Concrete unless otherwise noted, f'c = 4000 psi

STRUCTURAL STEEL:..... ASTM A709, Grade 36T3, Fy = 36,000 psi
Galvanize structural steel in accordance with AASHTO M111 unless shown otherwise.

Existing stations, elevations and dimensions are based on as-built plans, and those plans may not show existing dimensions and conditions. Where dimensions of the proposed work depend on the existing bridge dimensions, field-verify the controlling dimensions and adjust proposed dimensions of the work to fit existing conditions.

ABBREVIATIONS

℄	= centerline	f'c	= specified concrete compressive strength
ℙ	= plate	Fy	= yield stress
&	= and	Galv.	= galvanize
@	= at	HR	= hour
ø	= diameter	Hwy.	= highway
±	= approximate	ksf	= 1000 pounds per square foot
AASHTO	= American Association of State Highway and Transportation Officials	LBS	= pound
		LF	= linear foot
ASTM	= American Society for Testing and Materials	LS	= lump sum
		Lt.	= left
Abut.	= abutment	max.	= maximum
AC	= acre	min.	= minimum
Approx.	= approximate	n.f.	= near face
b.f.	= back/dirt face	No.	= number
bot.	= bottom	o.c.	= on center
Br.	= bridge	O.H.W.	= ordinary high water
btwn.	= between	pcf	= pounds per cubic foot
Brg.	= bearings	psf	= pounds per square foot
CF	= cubic feet	psi	= pounds per square inch
C.I.P.	= cast in place	PVC	= point of vertical curve
Clr.	= clear, clearance	PVI	= point of vertical intersection
CY	= cubic yard	PVT	= point of vertical tangent
dia.	= diameter	R.O.W.	= right of way
Dwg.	= drawing	Rt.	= right
E	= expansion	Rd.	= road
(E)	= existing	spc.	= space, spaces
EA	= each	Sta.	= station
Elev.	= elevation	SF	= square feet
e.f.	= each face	SY	= square yard
e.w.	= each way	Symm.	= symmetric
F	= fixed	Typ.	= typical
f.f.	= front/air face	w/	= with

PRELIMINARY

PRELIMINARY PLAN

R:\cad\603,605,607\603-NOTES Tue, Feb/27/18 03:00pm

DESIGNED BY: Mary McRae	CHECKED: Leslie Daugherty		
DRAWN BY: Sam Sollie	CHECKED: Mary McRae		
QUANTITIES BY: Mary McRae	CHECKED: Leslie Daugherty		

REHABILITATION

STATE OF ALASKA
DEPARTMENT OF TRANSPORTATION AND PUBLIC FACILITIES
BRIDGE SECTION
3132 Channel Drive
Juneau, Alaska 99801
907-465-2975

SNOW RIVER BRIDGES
SEWARD HIGHWAY
BASIS OF ESTIMATE

BRIDGE NO. 603 605
DWG. NO.

STATE	PROJECT DESIGNATION	YEAR	SHEET NO.	TOTAL SHEETS
ALASKA	Z536100000	2018	NX	TtlShts

N02

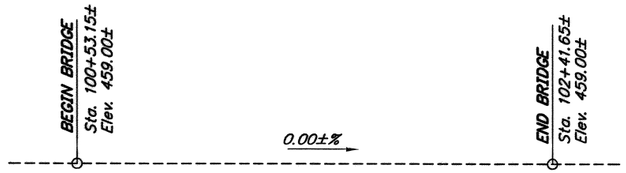

PROFILE GRADE
No Scale

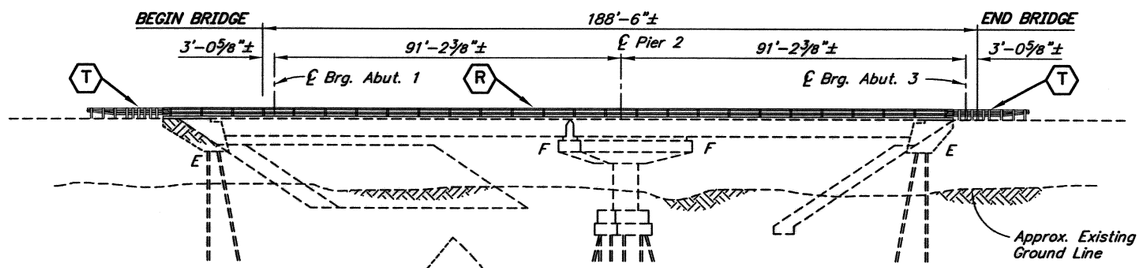

ELEVATION

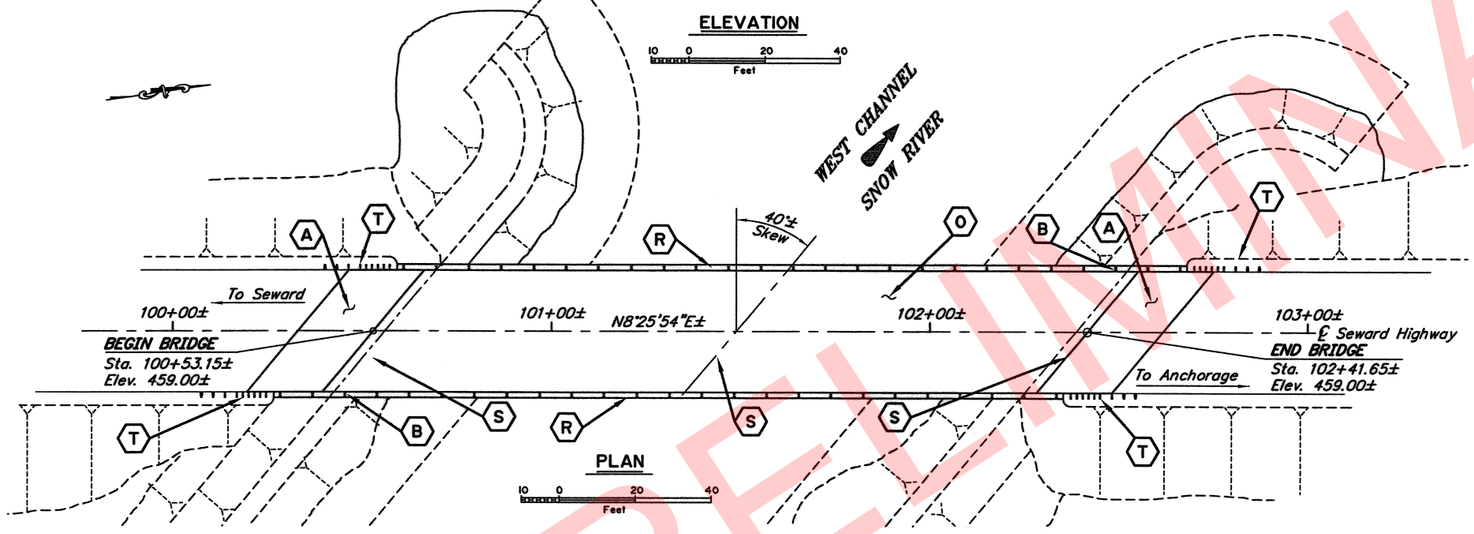

PLAN

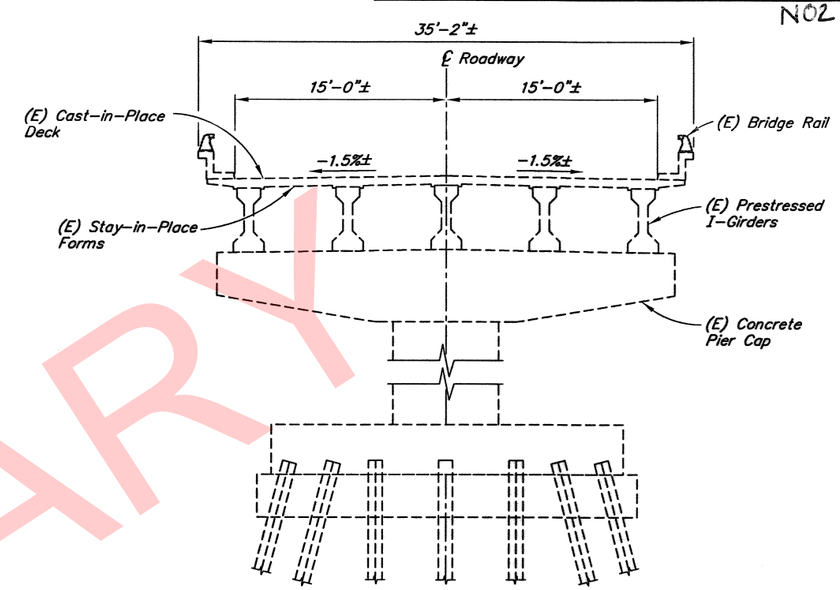

EXISTING TYPICAL SECTION

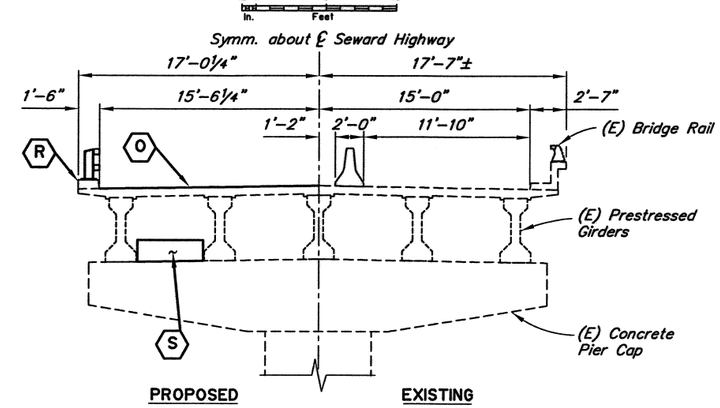

STAGED CONSTRUCTION

DRAWING INDEX

TITLE	DWG. NO.
GENERAL LAYOUT	1
ABUTMENTS	2
WINGWALLS	3
PIER	4
DECK DETAILS	5
OVERLAY	6
JOINT DETAILS	7
APPROACH SLABS	8
EXISTING RAIL DETAILS	9
STEEL BRIDGE RAILING	10
STEEL APPROACH RAILING	11
TRANSITION RAIL	12

LEGEND

- (A) = Install Approach Slab
- (B) = Bridge Number Plate
- (O) = Place Bridge Deck Overlay
- (R) = Replace Bridge Railing
- (S) = Install Shear Keys at Abutments and Piers
- (T) = Install Transition Rail

REHABILITATION

PRELIMINARY PLAN

NOTE:

(E) = Existing
- - - - - = Existing
——— = Proposed

Bridge stations and elevations are based on as-built drawings.

For project stations and elevations, see roadway sheets.

Verify controlling field dimensions before ordering or fabricating any material.

PRELIMINARY

DESIGNED BY: Mary McRae	CHECKED: Leslie Daugherty	LAYOUT BY: Mary McRae	CHECKED BY: Leslie Daugherty
DRAWN BY: Sam Sollie	CHECKED: Mary McRae	SPECIFICATIONS BY: Mary McRae	P S & E COMPARED: Leslie Daugherty
QUANTITIES BY: Mary McRae	CHECKED: Leslie Daugherty	APPROVAL RECOMMENDED BY: Rich Pratt	

STATE OF ALASKA
DEPARTMENT OF TRANSPORTATION AND PUBLIC FACILITIES
BRIDGE SECTION
3132 Channel Drive
Juneau, Alaska 99801
907-465-2975

SNOW RIVER WEST CHANNEL
SEWARD HIGHWAY
GENERAL LAYOUT

BRIDGE NO. 603
DWG. NO. 1

R:\cad\603,605,607\603-GENERAL LAYOUT Tue, Feb/27/18 03:00pm

STATE	PROJECT DESIGNATION	YEAR	SHEET NO.	TOTAL SHEETS
ALASKA	Z536100000	2018	N03	

REINFORCING STEEL - ONE ABUTMENT

MARK	NOTE	SIZE	NO.	LENGTH	TYPE	BENDING DIAGRAM
A601	E	6	6	14'-5½"	BENT	A601
A602	E	6	6	17'-0"	BENT	A602

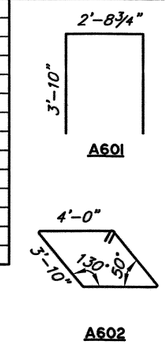

E - Epoxy-Coated

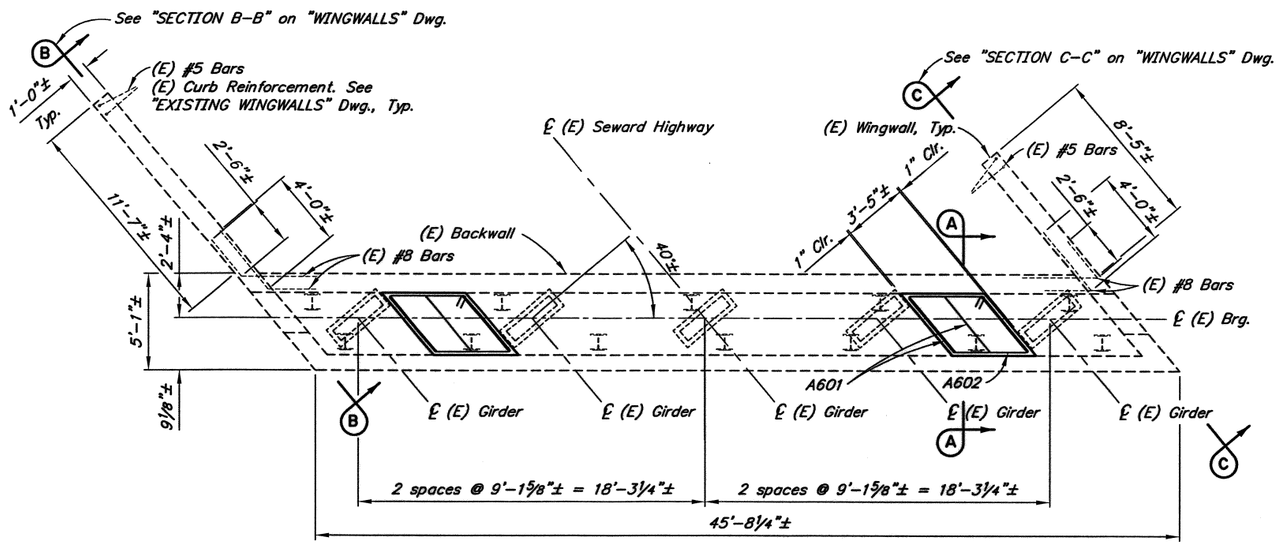

PLAN

12 0 4 8
In. Feet

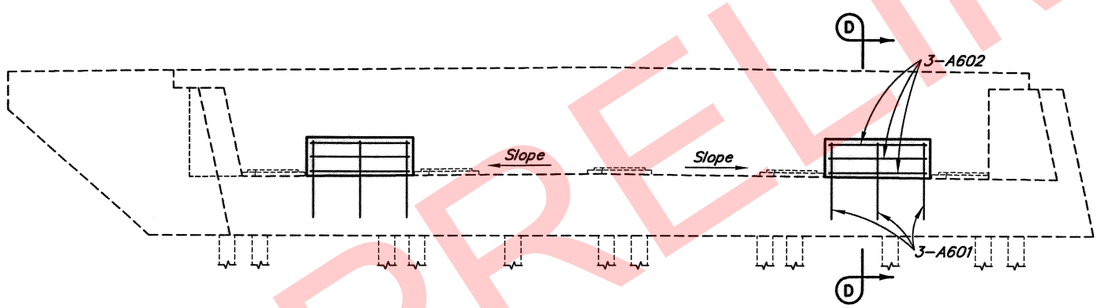

ELEVATION

12 0 4 8
In. Feet

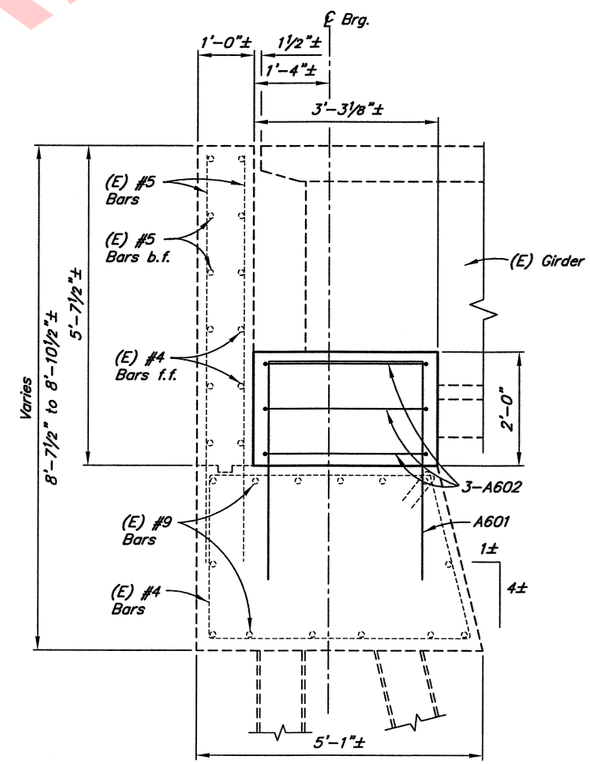

SECTION A-A

12 6 0 1 2 3
In. Feet

NOTE:

(E) = Existing
- - - - - = Existing
——— = Proposed

Verify controlling field dimensions before ordering or fabricating any material.

PRELIMINARY

DESIGNED BY: Mary McRae	CHECKED: Leslie Daugherty	**PRELIMINARY PLAN**	STATE OF ALASKA DEPARTMENT OF TRANSPORTATION AND PUBLIC FACILITIES BRIDGE SECTION 3132 Channel Drive Juneau, Alaska 99801 907-465-2975
DRAWN BY: Sam Sollie	CHECKED: Mary McRae		
QUANTITIES BY: Mary McRae	CHECKED: Leslie Daugherty		

SNOW RIVER WEST CHANNEL

SEWARD HIGHWAY

ABUTMENTS

BRIDGE NO. 603

DWG. NO. 2

R:\cad\603,605,607\603-ABUTMENTS Tue, Feb/27/18 03:00pm

STATE	PROJECT DESIGNATION	YEAR	SHEET NO.	TOTAL SHEETS
ALASKA	Z536100000	2018	NOH	

REINFORCING STEEL - ONE ABUTMENT

MARK	NOTE	SIZE	NO.	LENGTH	TYPE	BENDING DIAGRAM
W401	E	4	17	3'-0"	---	
W402	E	4	17	6'-10"	STIRRUP	
W403	E	4	17	5'-9"	STIRRUP	
W501	E	5	5	11'-8"	---	
W502	E	5	5	7'-8"	---	
W503	E	4	17	12'-8"	---	
W504	E	5	2	8'-8"	---	

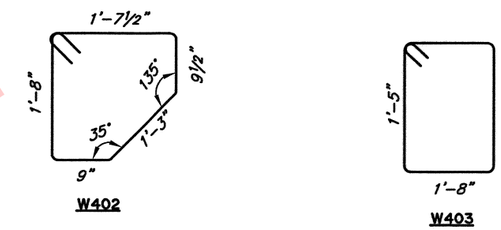

E – Epoxy-Coated

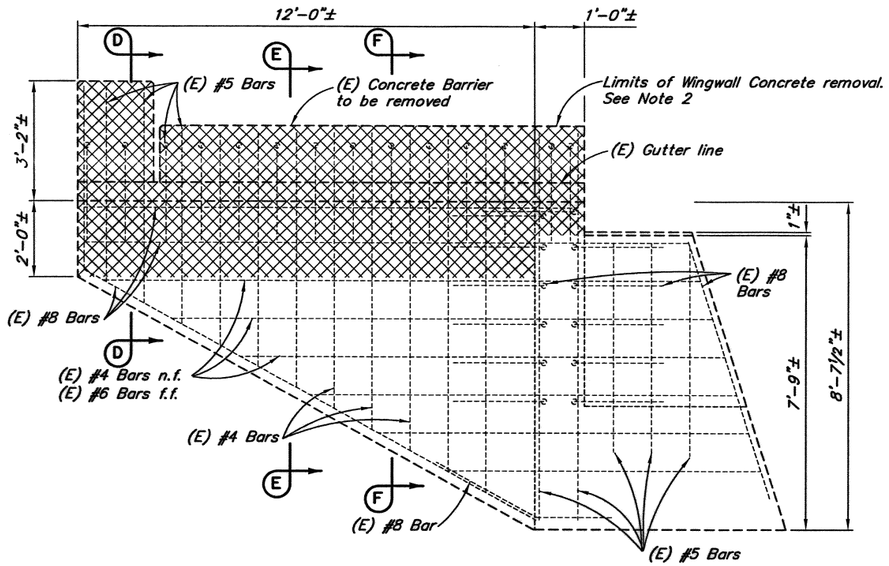

SECTION B-B

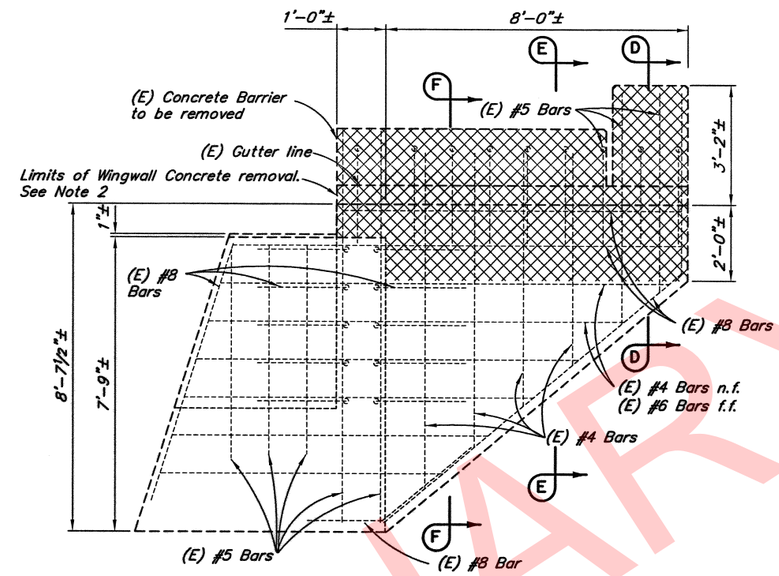

SECTION C-C

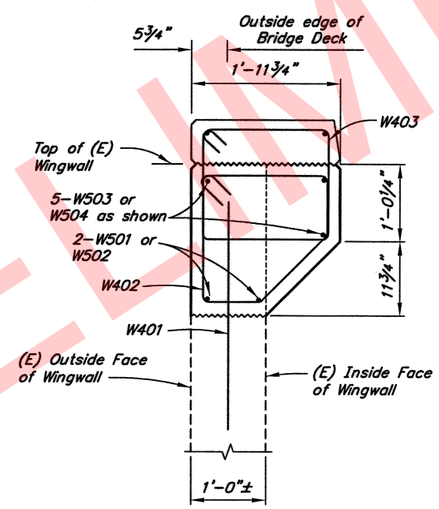

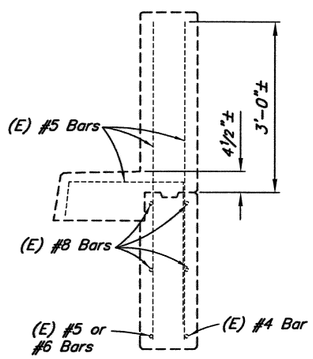

SECTION D-D

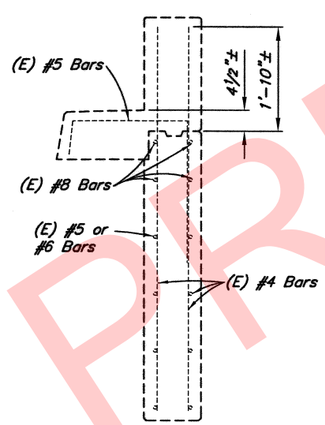

SECTION E-E

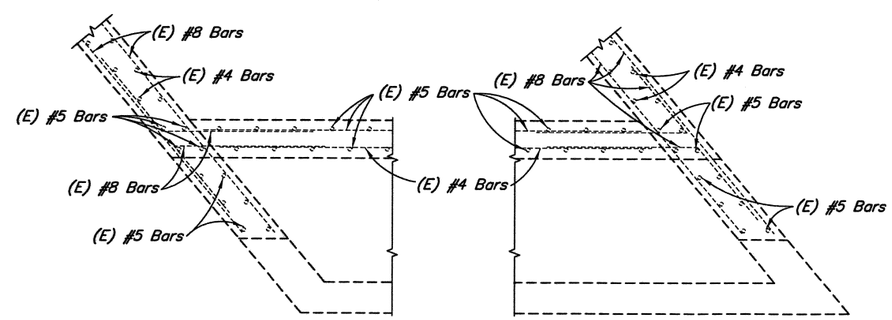

PROPOSED SECTION F-F

CORNER DETAILS

NOTE:

(E) = Existing

- - - - - = Existing

——— = Proposed

1. Verify controlling field dimensions before ordering or fabricating any material.
2. Remove curb, parapet, and existing wingwall to limits shown, preserving vertical wingwall reinforcement.

PRELIMINARY

DESIGNED BY: Mary McRae	CHECKED: Leslie Daugherty	PRELIMINARY PLAN	STATE OF ALASKA DEPARTMENT OF TRANSPORTATION AND PUBLIC FACILITIES BRIDGE SECTION 3132 Channel Drive Juneau, Alaska 99801 907-465-2975
DRAWN BY: Sam Sollie	CHECKED: Mary McRae		
QUANTITIES BY: Mary McRae	CHECKED: Leslie Daugherty		

SNOW RIVER WEST CHANNEL

SEWARD HIGHWAY

WINGWALLS

BRIDGE NO. 603

DWG. NO. 3

R:\cad\603,605,607\603-WINGWALLS Tue, Feb/27/18 03:00pm

STATE	PROJECT DESIGNATION	YEAR	SHEET NO.	TOTAL SHEETS
ALASKA	Z536100000	2018	N05	

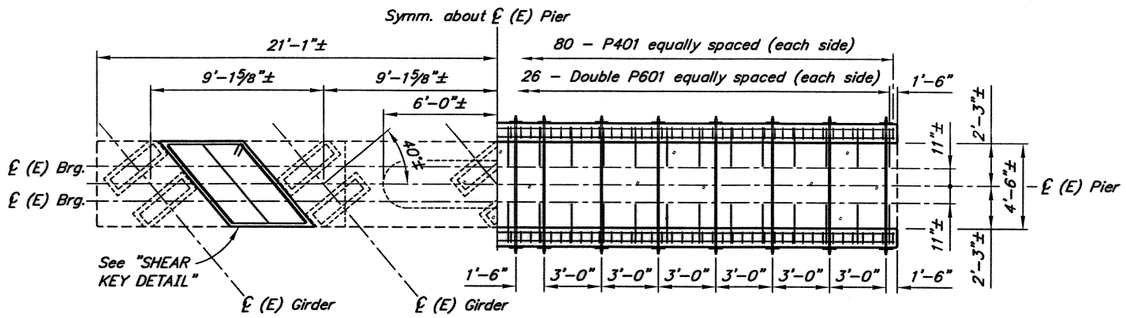

EXISTING PROPOSED

PLAN

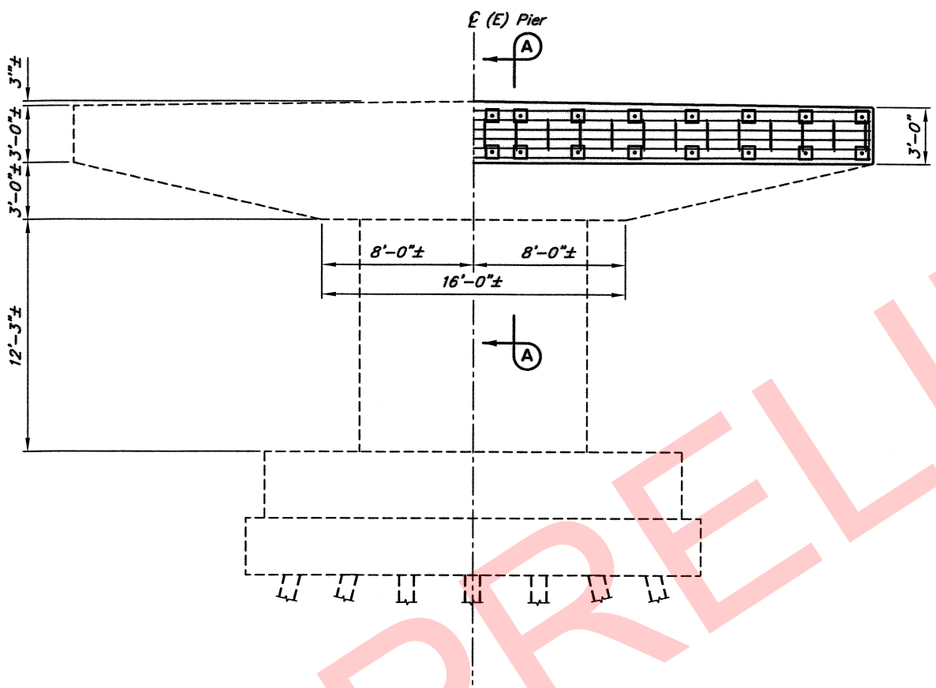

EXISTING PROPOSED

ELEVATION

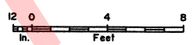

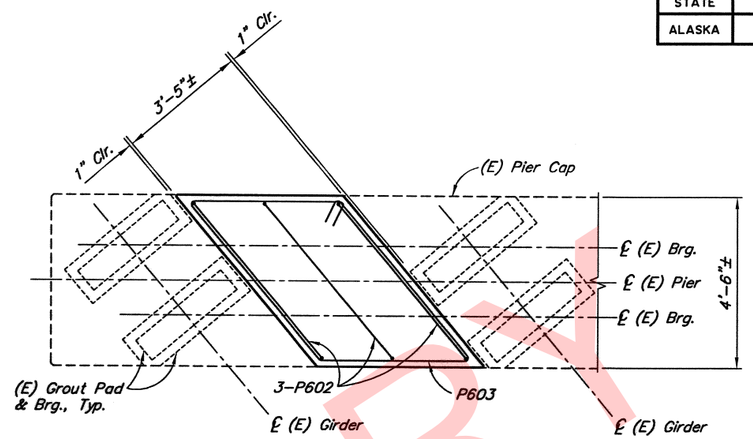

SHEAR KEY DETAIL

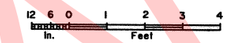

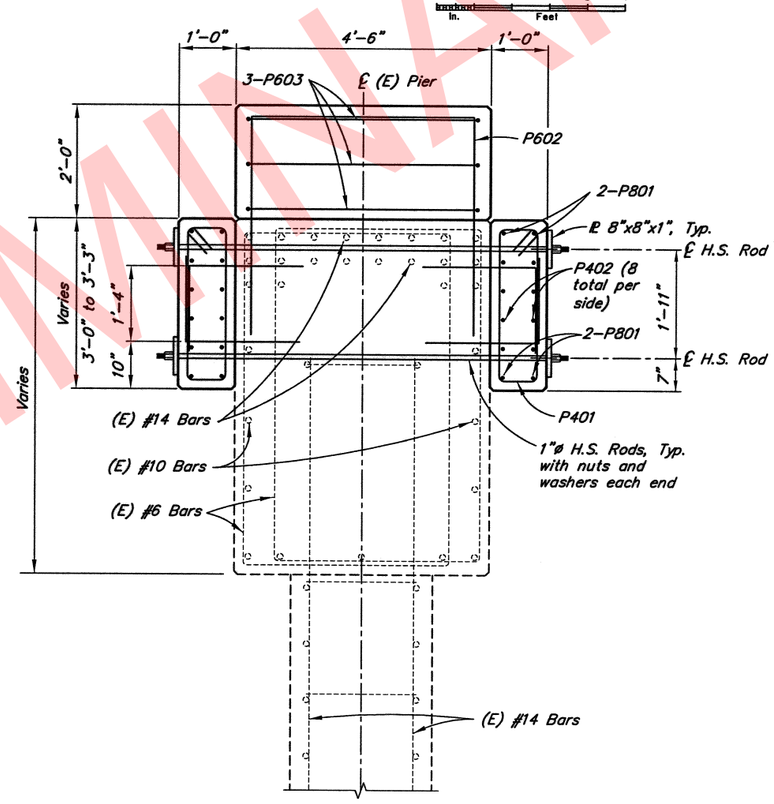

SECTION A-A

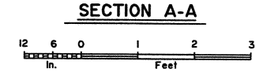

REINFORCING STEEL - PIER

MARK	NOTE	SIZE	NO.	LENGTH	TYPE
P401	E	4	160	7'-5"	STIRRUP
P402	E	4	16	41'-10"	---
P601	E	6	104	3'-6"	BENT
P602	E	6	6	14'-5½"	BENT
P603	E	6	6	17'-0"	BENT
P801	E	8	8	41'-10"	---

BENDING DIAGRAM

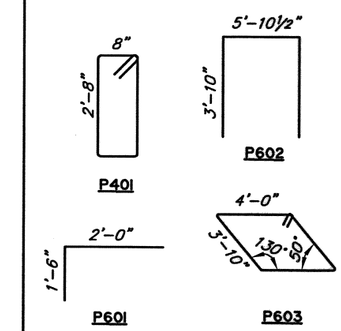

E – Epoxy-Coated

NOTE:

(E) = Existing

- - - - - = Existing

——— = Proposed

Verify controlling field dimensions before ordering or fabricating any material.

PRELIMINARY

DESIGNED BY: Mary McRae	CHECKED: Leslie Daugherty	PRELIMINARY PLAN	STATE OF ALASKA DEPARTMENT OF TRANSPORTATION AND PUBLIC FACILITIES BRIDGE SECTION 3132 Channel Drive Juneau, Alaska 99801 907-465-2975
DRAWN BY: Sam Sollie	CHECKED: Mary McRae		
QUANTITIES BY: Mary McRae	CHECKED: Leslie Daugherty		

SNOW RIVER WEST CHANNEL

SEWARD HIGHWAY

PIER

BRIDGE NO. 603

DWG. NO. 4

R:\cad\603,605,607\603-PIERS Tue, Feb/27/18 03:00pm

STATE	PROJECT DESIGNATION	YEAR	SHEET NO.	TOTAL SHEETS
ALASKA	Z536100000	2018	N06	

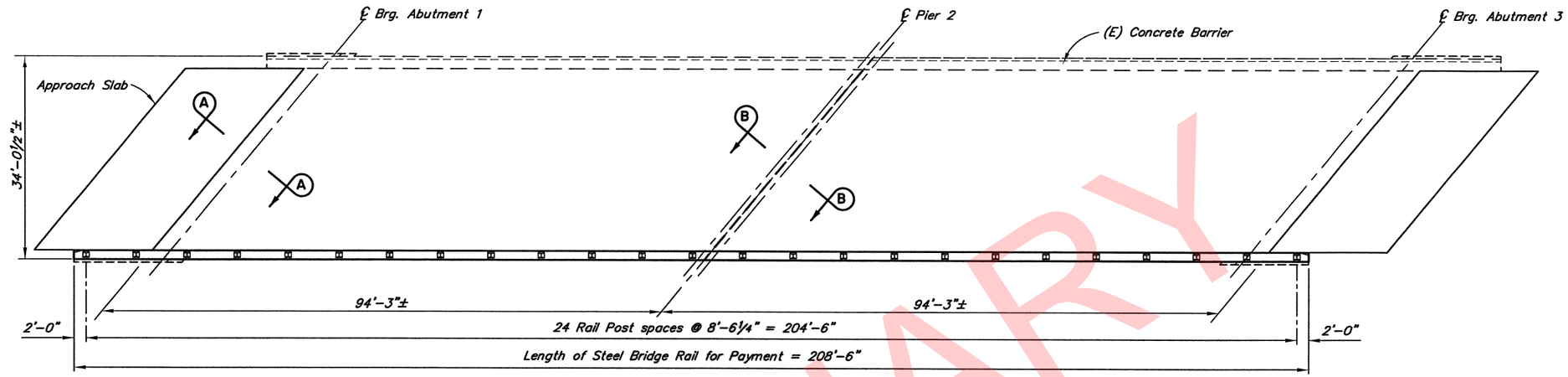

DECK PLAN

12 0 5 10 15 20
In. Feet

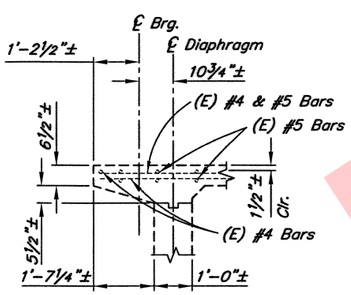

(E) SECTION A-A @ ABUTMENTS

12 6 0 1 2 3 4
In. Feet

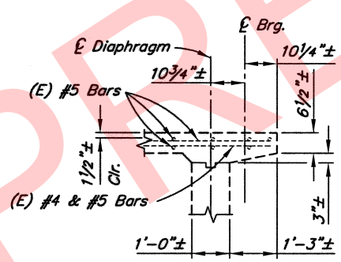

(E) SECTION B-B @ PIER

12 6 0 1 2 3 4
In. Feet

NOTE:

(E) = Existing
- - - - - = Existing
——— = Proposed

Verify controlling field dimensions before ordering or fabricating any material.

PRELIMINARY

DESIGNED BY: Mary McRae	CHECKED: Leslie Daugherty	PRELIMINARY PLAN	STATE OF ALASKA DEPARTMENT OF TRANSPORTATION AND PUBLIC FACILITIES BRIDGE SECTION 3132 Channel Drive Juneau, Alaska 99801 907-465-2975
DRAWN BY: Sam Sollie	CHECKED: Mary McRae		
QUANTITIES BY: Mary McRae	CHECKED: Leslie Daugherty		

SNOW RIVER BRIDGE WEST CHANNEL

SEWARD HIGHWAY

DECK DETAILS

BRIDGE NO. 603

DWG. NO. 5

R:\cad\603,605,607\603-DECK Tue, Feb/27/18 03:00pm

STATE	PROJECT DESIGNATION	YEAR	SHEET NO.	TOTAL SHEETS
ALASKA	Z536100000	2018	107	

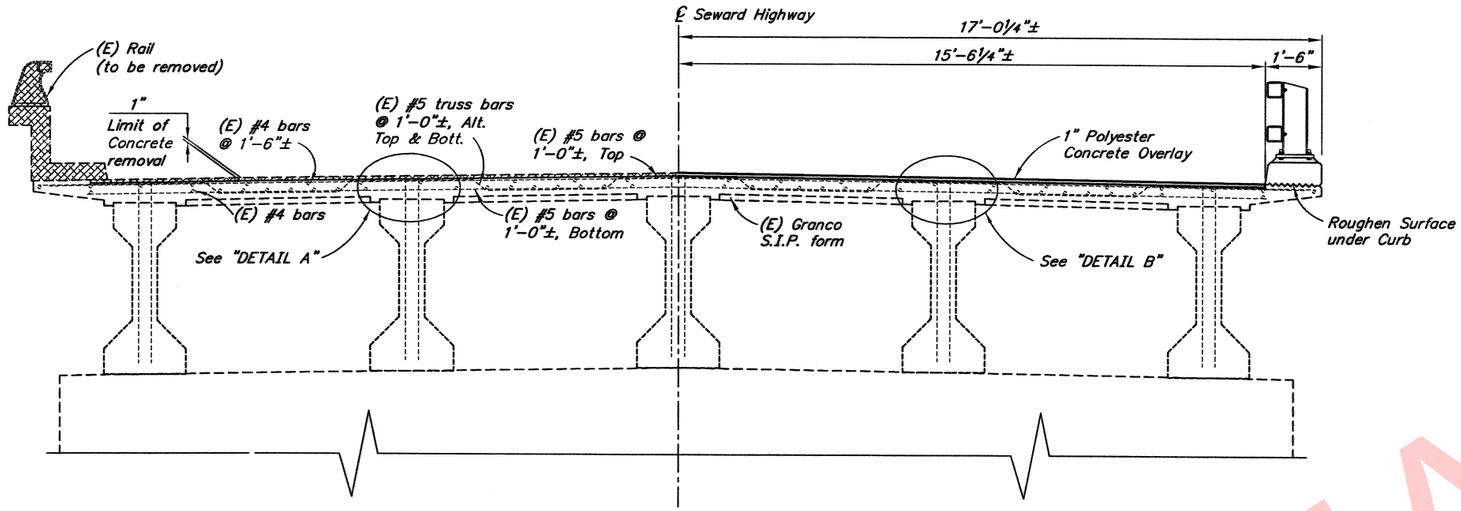

TYPICAL SECTION

12 6 0 1 2 3 4
In. Feet

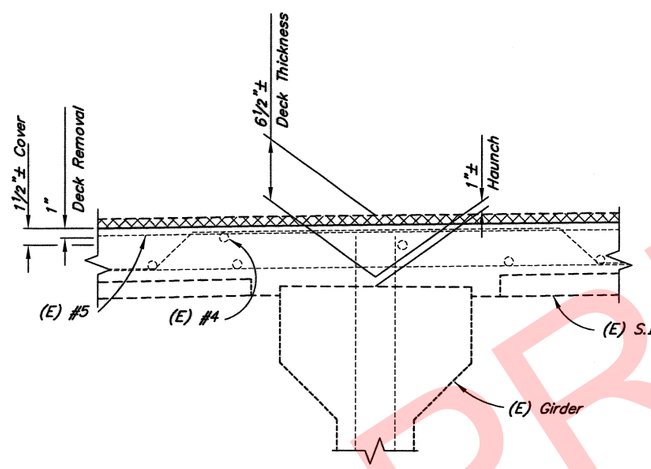

DETAIL A

12 6 0 1
In. Feet

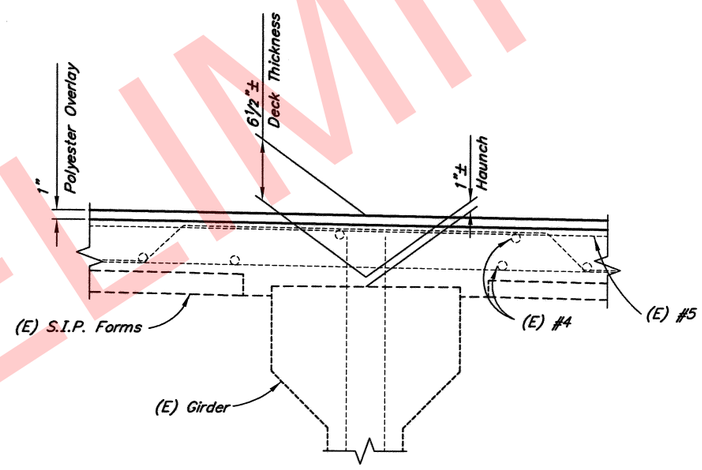

DETAIL B

12 6 0 1
In. Feet

NOTE:

(E) = Existing

- - - - - = Existing

——— = Proposed

1. Verify controlling field dimensions before ordering or fabricating any material.
2. Do not damage existing drains. Slope overlay ½" over 8" around drains to ensure drainage.

PRELIMINARY

DESIGNED BY: Mary McRae	CHECKED: Leslie Daugherty	PRELIMINARY PLAN	STATE OF ALASKA DEPARTMENT OF TRANSPORTATION AND PUBLIC FACILITIES BRIDGE SECTION 3132 Channel Drive Juneau, Alaska 99801 907-465-2975
DRAWN BY: Sam Sollie	CHECKED: Mary McRae		
QUANTITIES BY: Mary McRae	CHECKED: Leslie Daugherty		

SNOW RIVER WEST CHANNEL

SEWARD HIGHWAY

OVERLAY

BRIDGE NO. 603

DWG. NO. 6

R:\ccd\603,605,607\603-OVERLAY Tue, Feb/27/18 03:00pm

STATE	PROJECT DESIGNATION	YEAR	SHEET NO.	TOTAL SHEETS
ALASKA	Z536100000	2018	N08	

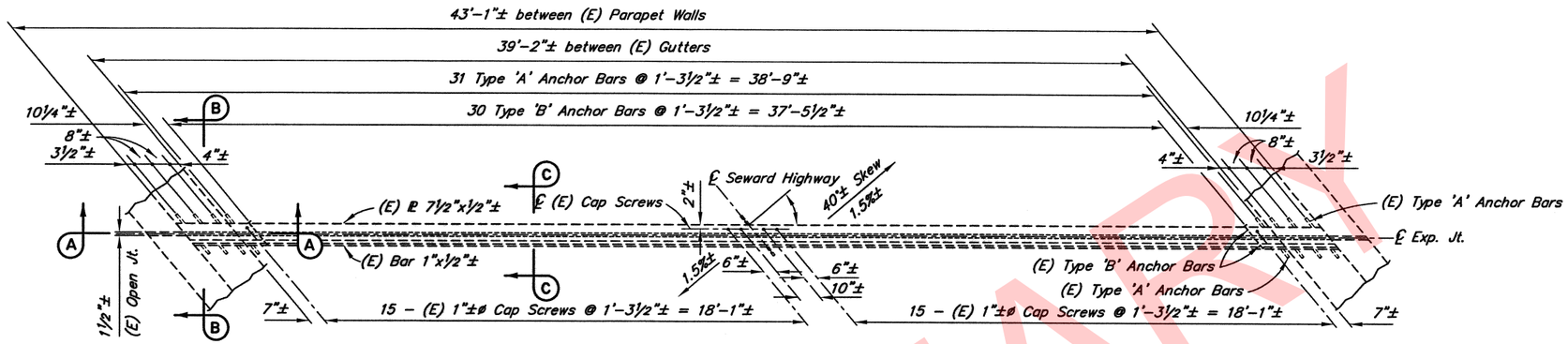

(E) PLAN - TRANSVERSE JOINT DETAIL

12 0 1 2 3 4
In. Feet

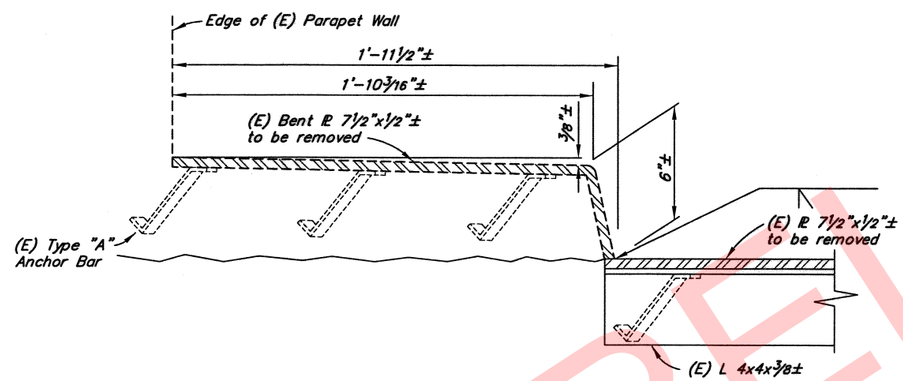

SECTION A-A

6 3 0 1
In. Feet

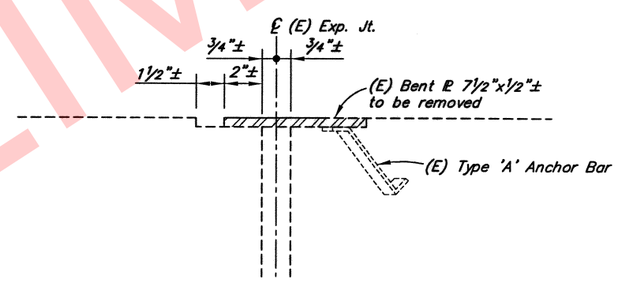

SECTION B-B

6 3 0 1
In. Feet

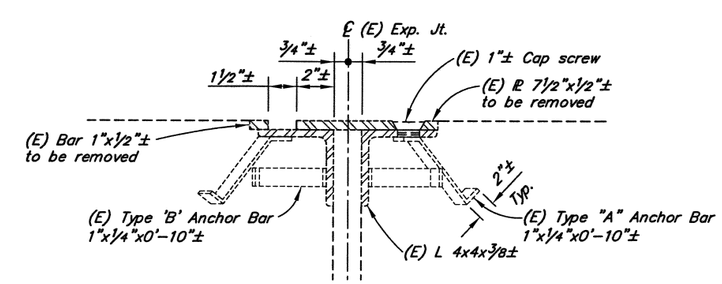

SECTION C-C

6 3 0 1
In. Feet

NOTE:

(E) = Existing

- - - - - = Existing

——— = Proposed

1. Verify controlling field dimensions before ordering or fabricating any material.
2. Remove exposed steel joint. Leave embedded steel hardware intact.

PRELIMINARY

R:\ccd\603,605,607\603-JOINTS Tue, Feb/27/18 03:00pm

DESIGNED BY: Mary McRae	CHECKED: Leslie Daugherty	PRELIMINARY PLAN	STATE OF ALASKA DEPARTMENT OF TRANSPORTATION AND PUBLIC FACILITIES BRIDGE SECTION 3132 Channel Drive Juneau, Alaska 99801 907-465-2975
DRAWN BY: Sam Sollie	CHECKED: Mary McRae		
QUANTITIES BY: Mary McRae	CHECKED: Leslie Daugherty		

SNOW RIVER WEST CHANNEL

SEWARD HIGHWAY

JOINT DETAILS

BRIDGE NO. 603

DWG. NO. 7

STATE	PROJECT DESIGNATION	YEAR	SHEET NO.	TOTAL SHEETS
ALASKA	Z536100000	2018	N09	

REINFORCING STEEL - ONE SLAB

MARK	NOTE	SIZE	NO.	LENGTH	TYPE	BENDING DIAGRAM
S401	M,S	4	64	45'-8"	---	
S501		5	62	20'-5"	---	
S502		5	33	3'-6"	BENT	
S801		8	62	20'-5"	---	

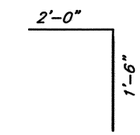

S502

M – Match cross slope
S – Splice permitted. Splice length not included

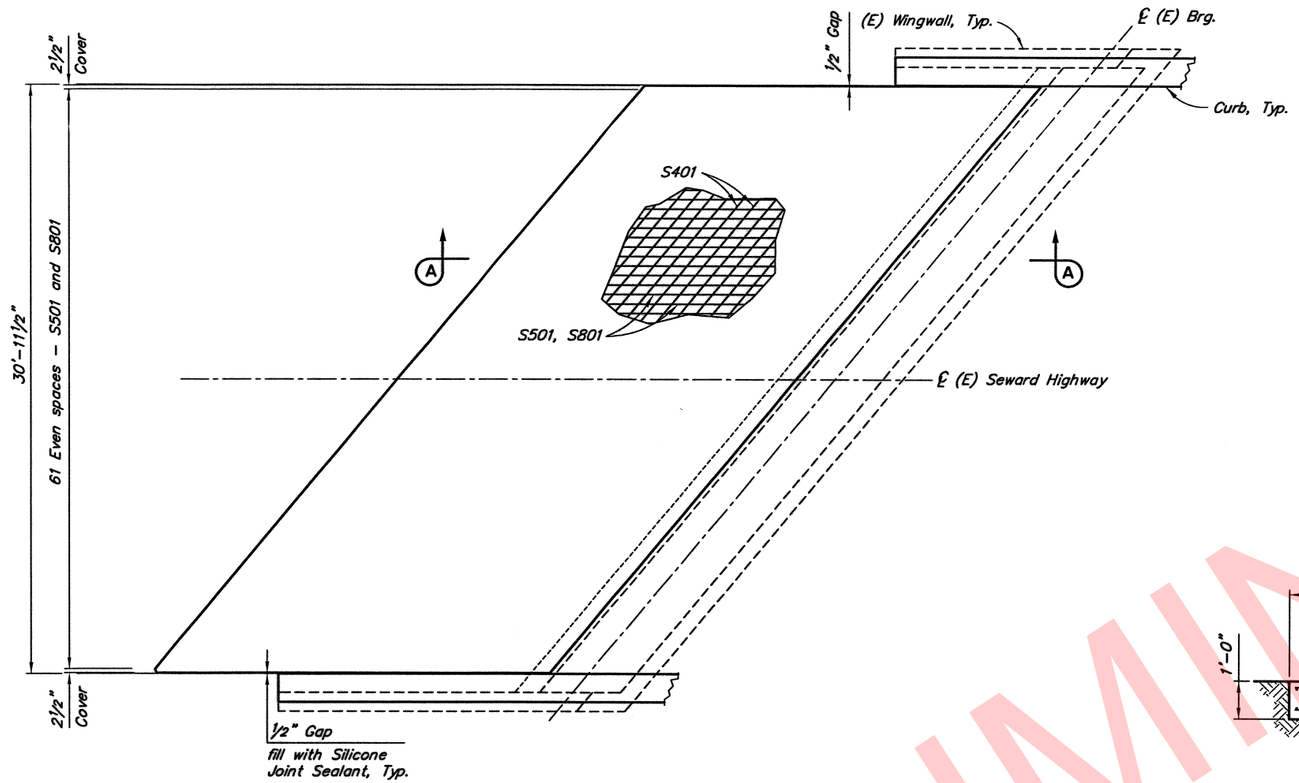

PLAN

(Abutment 1 shown Abutment 3 similar)

12 0 4 8
In. Feet

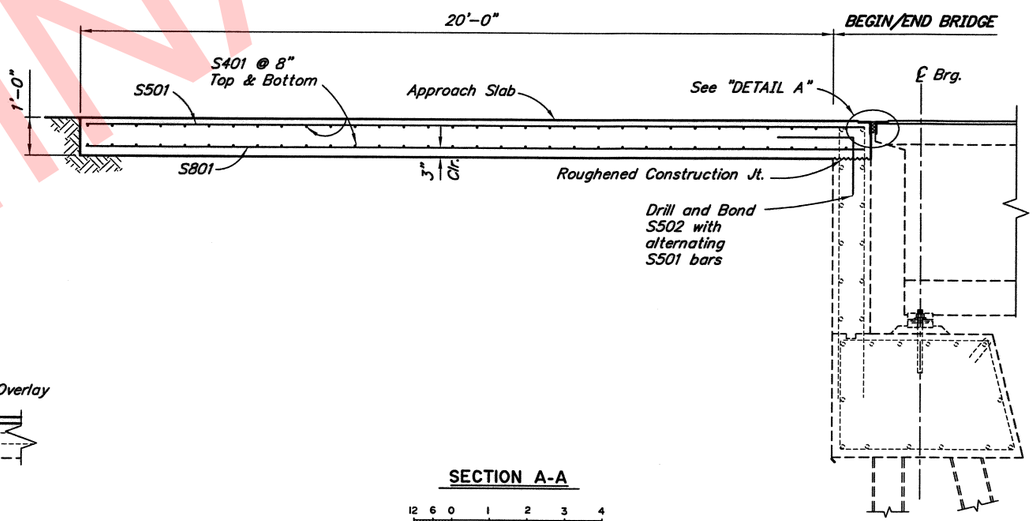

SECTION A-A

12 6 0 1 2 3 4
In. Feet

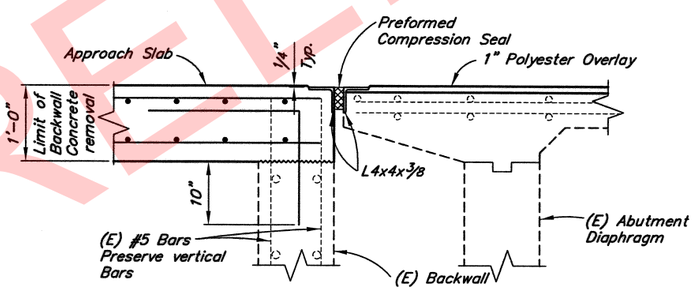

DETAIL A

12 6 0 1 2
In. Feet

NOTE:

(E) = Existing
- - - - - = Existing
——— = Proposed

1. Verify controlling field dimensions before ordering or fabricating any material.
2. Cast Approach Slabs last.

PRELIMINARY

DESIGNED BY: Mary McRae	CHECKED: Leslie Daugherty	PRELIMINARY PLAN	STATE OF ALASKA DEPARTMENT OF TRANSPORTATION AND PUBLIC FACILITIES BRIDGE SECTION 3132 Channel Drive Juneau, Alaska 99801 907-465-2975
DRAWN BY: Sam Sollie	CHECKED: Mary McRae		
QUANTITIES BY: Mary McRae	CHECKED: Leslie Daugherty		

SNOW RIVER WEST CHANNEL

SEWARD HIGHWAY

APPROACH SLABS

BRIDGE NO. 603

DWG. NO. 8

R:\cad\603,605,607\603-SLABS Tue, Feb/27/18 03:00pm

STATE	PROJECT DESIGNATION	YEAR	SHEET NO.	TOTAL SHEETS
ALASKA	Z536100000	2018	N10	

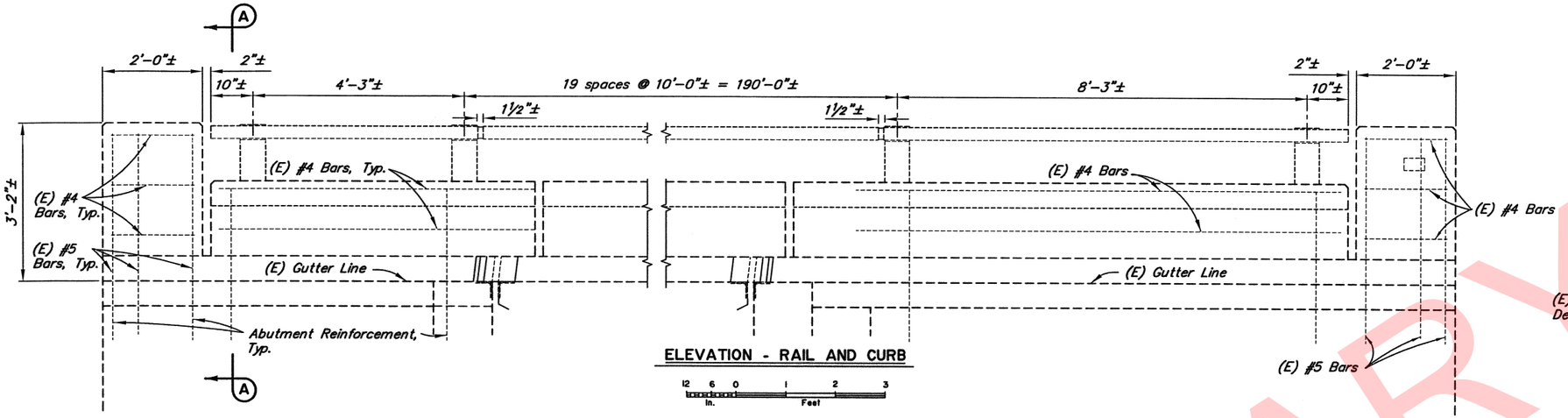

ELEVATION - RAIL AND CURB

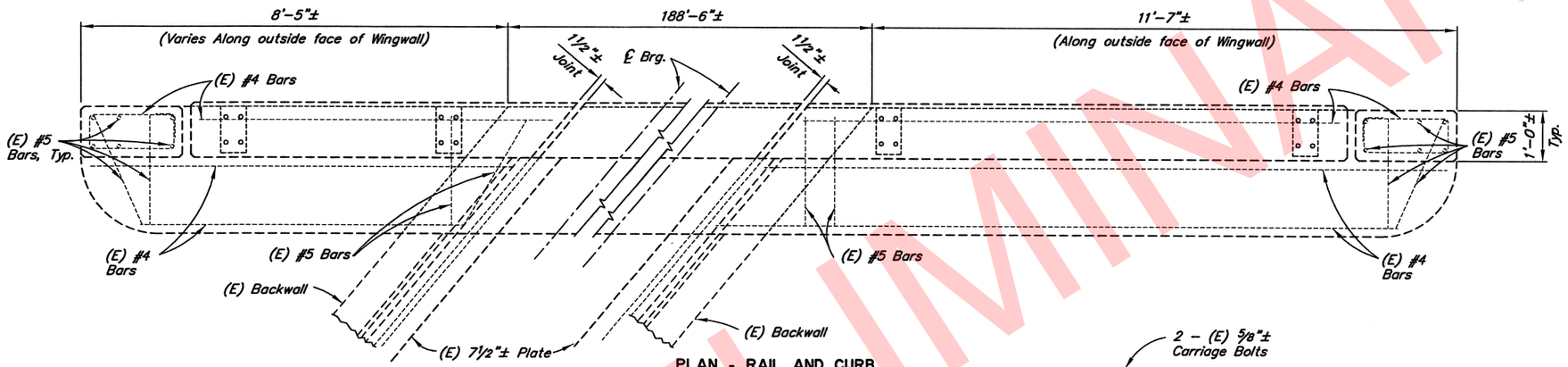

PLAN - RAIL AND CURB

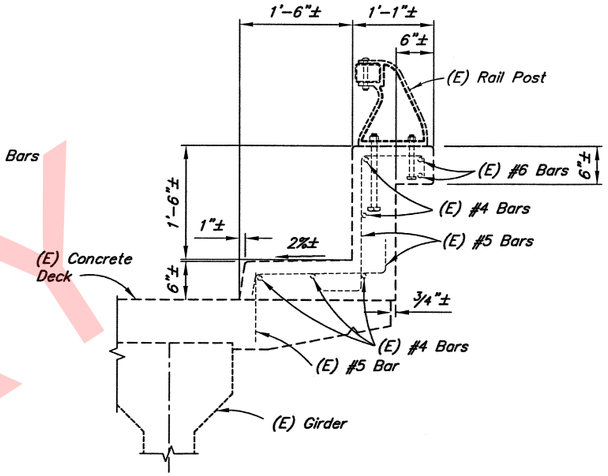

EXISTING TYPICAL SECTION - CURB AND RAILING

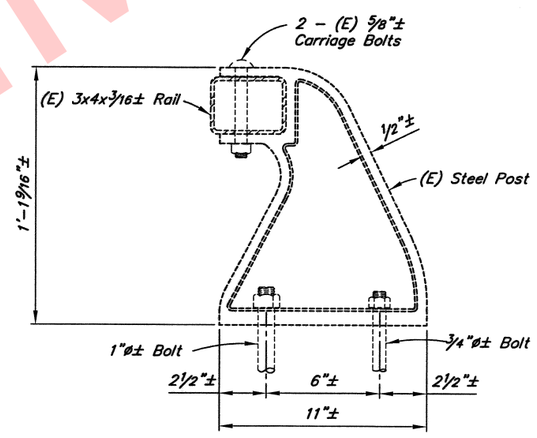

SIDE VIEW

EXISTING RAIL AND RAIL POST DETAILS

NOTE:

(E) = Existing

----- = Existing

——— = Proposed

Verify controlling field dimensions before ordering or fabricating any material.

PRELIMINARY

DESIGNED BY: Mary McRae	CHECKED: Leslie Daugherty	**PRELIMINARY PLAN**	STATE OF ALASKA DEPARTMENT OF TRANSPORTATION AND PUBLIC FACILITIES BRIDGE SECTION 3132 Channel Drive Juneau, Alaska 99801 907-465-2975
DRAWN BY: Sam Sollie	CHECKED: Mary McRae		
QUANTITIES BY: Mary McRae	CHECKED: Leslie Daugherty		

SNOW RIVER WEST CHANNEL

SEWARD HIGHWAY

EXISTING RAIL DETAILS

BRIDGE NO. 603

DWG. NO. 9

R:\cad\603,605,607\603-E RAIL Tue, Feb/27/18 03:00pm

STATE	PROJECT DESIGNATION	YEAR	SHEET NO.	TOTAL SHEETS
ALASKA	Z536100000	2018	N11	

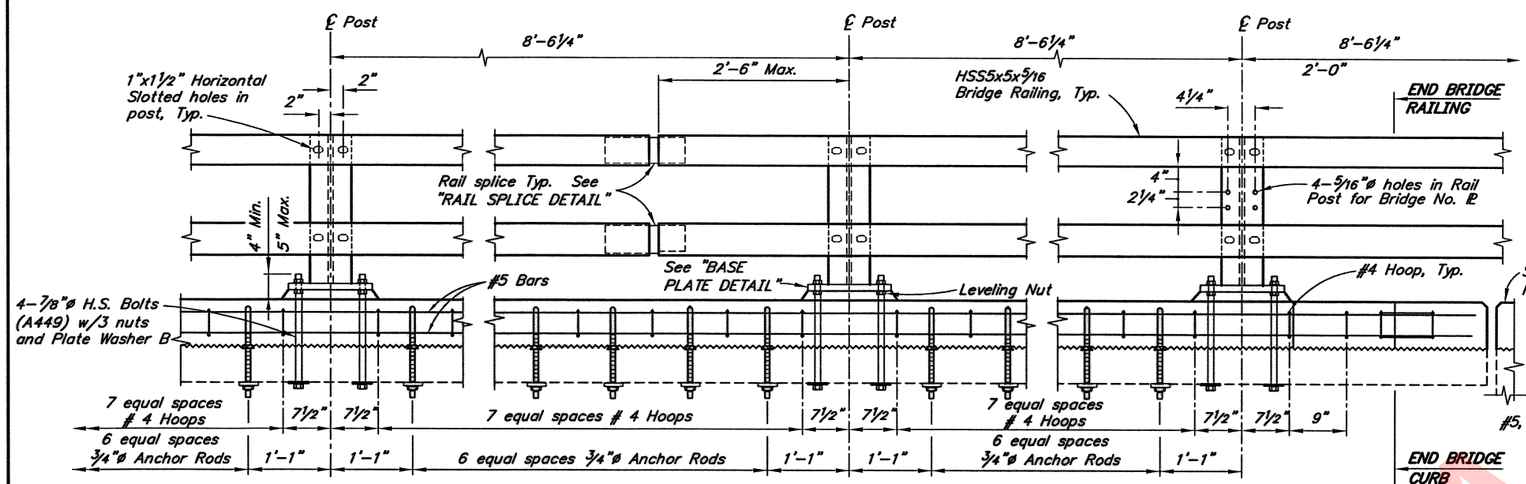

TYPICAL POST ELEVATION

EXPANSION JOINT

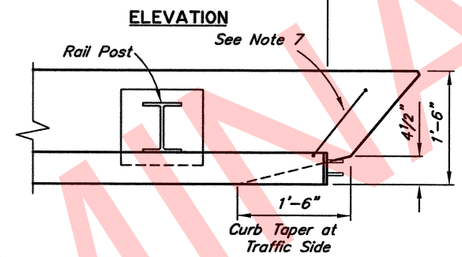

ELEVATION

PLAN

END POST DETAIL

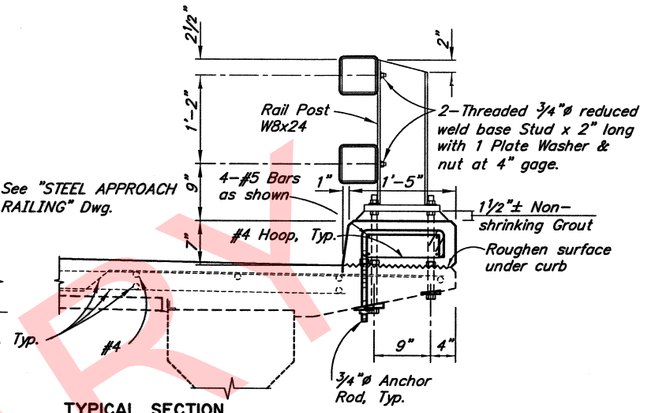

TYPICAL SECTION

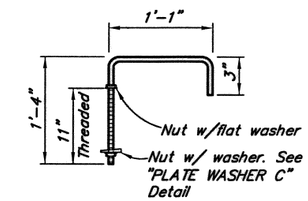

¾"ø ANCHOR ROD

No Scale

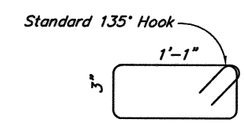

#4 HOOP DETAIL

No Scale

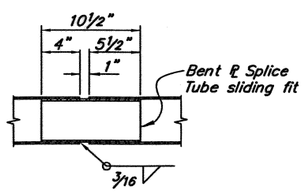

RAIL SPLICE DETAIL

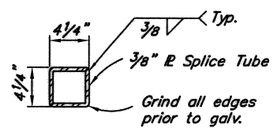

SPLICE TUBE

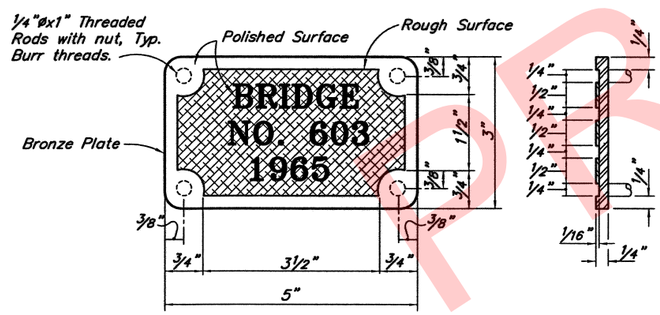

BRONZE BRIDGE NO. PLATE

No Scale

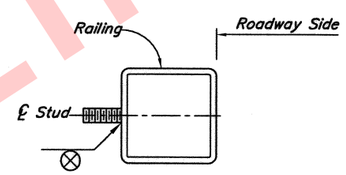

RAILING STUD DETAIL

No Scale

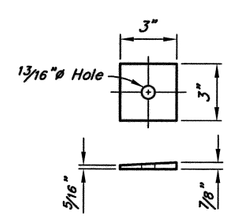

PLATE WASHER C (F436)

No Scale

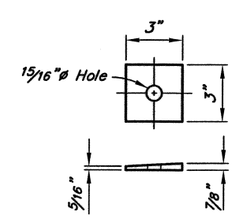

PLATE WASHER B (F436)

No Scale

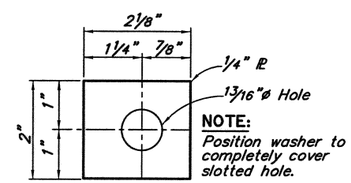

NOTE:
Position washer to completely cover slotted hole.

PLATE WASHER

No Scale

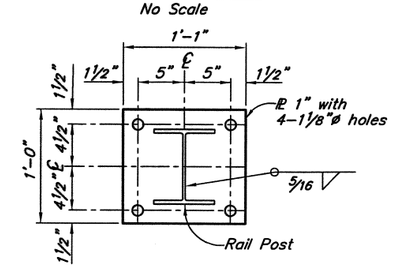

BASE PLATE DETAIL

NOTES:

(E) = Existing

- - - - - = Existing

——— = Proposed

1. Furnish and install two bridge no. plates. Use "Century" type style lettering. Use studs and nuts that conform to UNS C65100 or UNS C65500. Braze ¼"ø threaded rod to back of plate with nut (4 req'd.). Use tamperproof nuts.
2. Locate bridge no. plates as shown on "GENERAL LAYOUT" Dwg. (2 total)
3. Provide railing expansion joints at 50'-0" maximum intervals. Railing shall be continuous over 2 posts minimum. Railing expansion joints are required in rail panels that span bridge expansion joints.
4. See "DECK DETAILS" Dwg. for rail post spacing.
5. Install bridge rail posts plumb.
6. Use grout with a minimum 24 hour f'c of 3,000 psi.
7. Angle bars to accommodate curb taper.
8. Core and bond H.S. bolts through the existing deck and existing rail hardware. Drill and bond ¾"ø anchor rods through the existing deck. Adjust anchor rod spacing to avoid existing reinforcing.
9. Verify all controlling field dimensions before ordering or fabricating any material.

PRELIMINARY

DESIGNED BY: Mary McRae	CHECKED: Leslie Daugherty	PRELIMINARY PLAN	STATE OF ALASKA DEPARTMENT OF TRANSPORTATION AND PUBLIC FACILITIES BRIDGE SECTION 3132 Channel Drive Juneau, Alaska 99801 907-465-2975
DRAWN BY: Sam Sollie	CHECKED: Mary McRae		
QUANTITIES BY: Mary McRae	CHECKED: Leslie Daugherty		

SNOW RIVER WEST CHANNEL

SEWARD HIGHWAY

STEEL BRIDGE RAILING

BRIDGE NO. 603

DWG. NO. 10

R:\cad\603,605,607\603-STEEL RAIL Tue, Feb/27/18 03:00pm

STATE	PROJECT DESIGNATION	YEAR	SHEET NO.	TOTAL SHEETS
ALASKA	Z536100000	2018	N12	

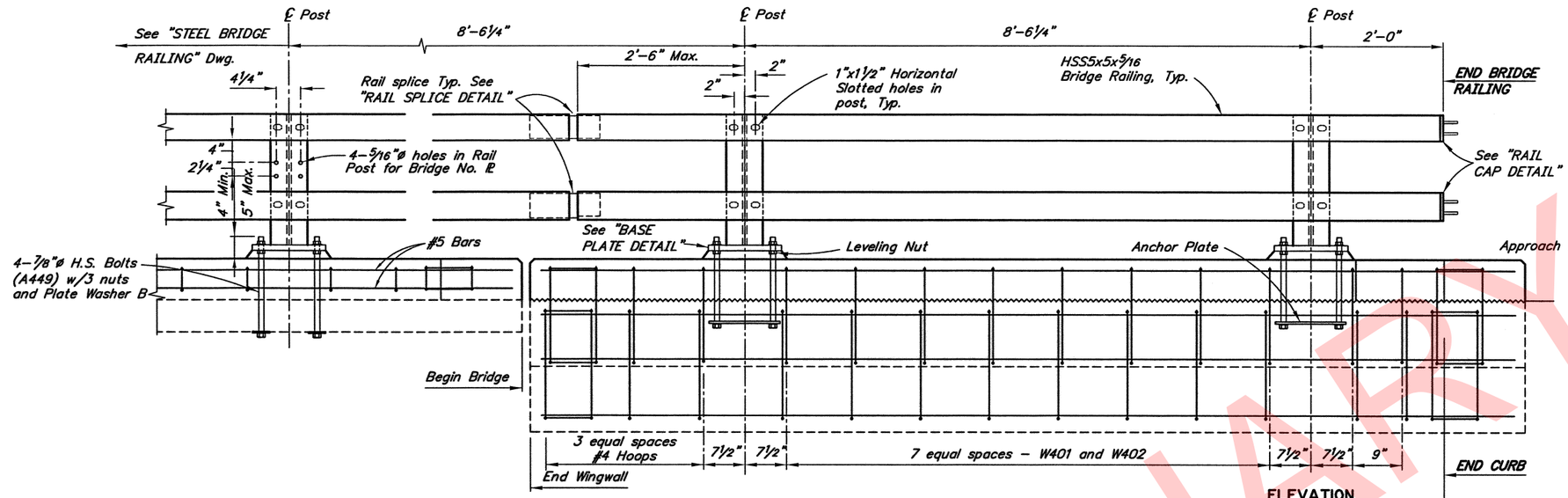

BRIDGE POST ELEVATION

EXPANSION JOINT

ELEVATION

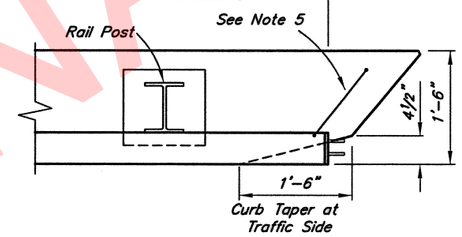

PLAN

END POST DETAIL

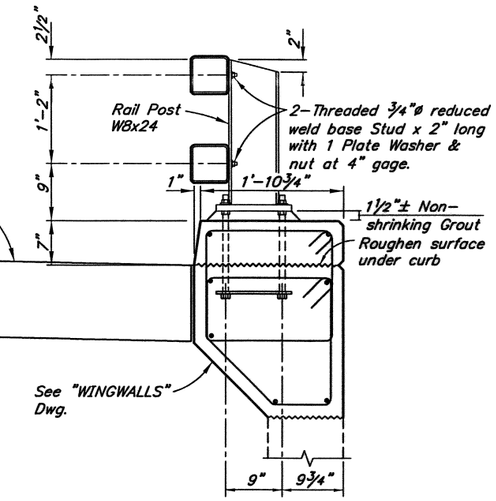

TYPICAL SECTION

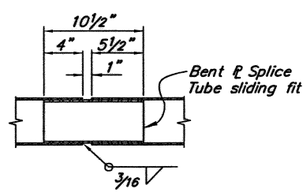

RAIL SPLICE DETAIL

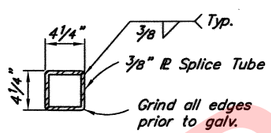

SPLICE TUBE

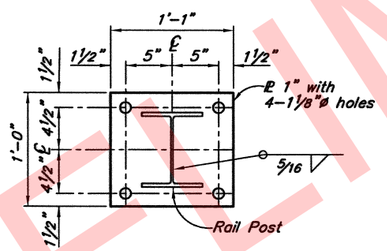

BASE PLATE DETAIL

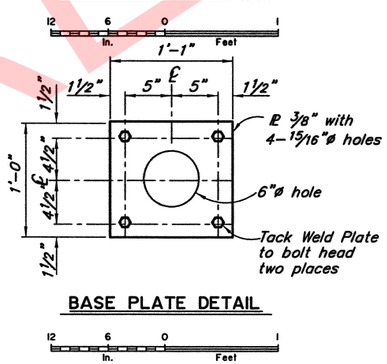

BASE PLATE DETAIL

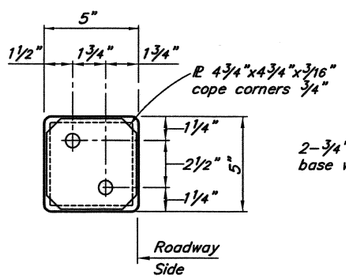

RAIL CAP DETAIL

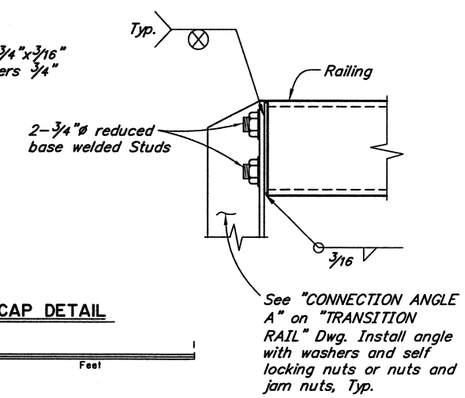

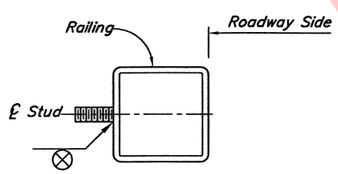

RAILING STUD DETAIL

No Scale

NOTES:

(E) = Existing

- - - - - = Existing

——— = Proposed

1. Provide railing expansion joints at 50'-0" maximum intervals. Railing shall be continuous over 2 posts minimum. Railing expansion joints are required in rail panels that span bridge expansion joints.
2. See "DECK DETAILS" Dwg. for rail post spacing.
3. Install bridge rail posts plumb.
4. Use grout with a minimum 24 hour f'c of 3,000 psi.
5. Angle bars to accommodate curb taper.
6. Core and bond H.S. bolts through the existing deck and existing rail hardware. Drill and bond ¾"ø anchor rods through the existing deck. Adjust anchor rod spacing to avoid existing reinforcing.
7. Verify all controlling field dimensions before ordering or fabricating any material.

PRELIMINARY

DESIGNED BY: Mary McRae	CHECKED: Leslie Daugherty	PRELIMINARY PLAN	STATE OF ALASKA DEPARTMENT OF TRANSPORTATION AND PUBLIC FACILITIES BRIDGE SECTION 3132 Channel Drive Juneau, Alaska 99801 907-465-2975
DRAWN BY: Sam Sollie	CHECKED: Mary McRae		
QUANTITIES BY: Mary McRae	CHECKED: Leslie Daugherty		

SNOW RIVER WEST CHANNEL

SEWARD HIGHWAY

STEEL APPROACH RAILING

BRIDGE NO. 603

DWG. NO. 11

R:\cad\603,605,607\603-APPROACH RAIL Tue, Feb/27/18 03:00pm

STATE	PROJECT DESIGNATION	YEAR	SHEET NO.	TOTAL SHEETS
ALASKA	Z536100000	2018	N13	

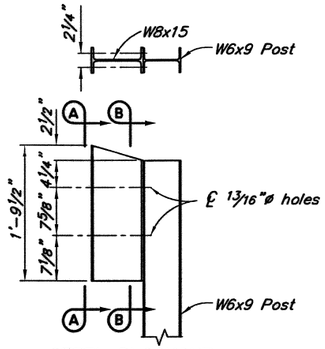

STEEL BLOCKOUT

See Note 2 for additional details

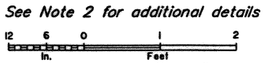

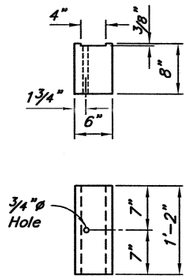

WOOD BLOCKOUT

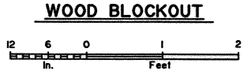

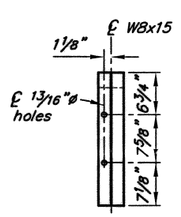

VIEW A-A

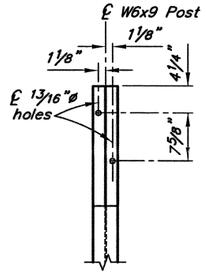

SECTION B-B

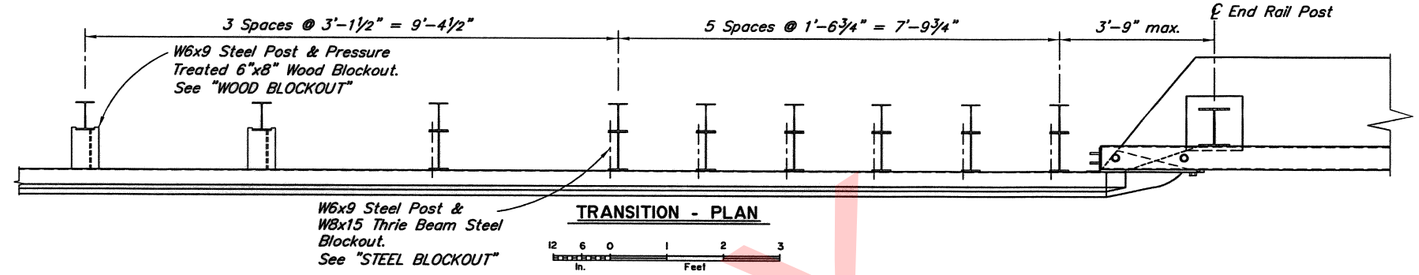

TRANSITION - PLAN

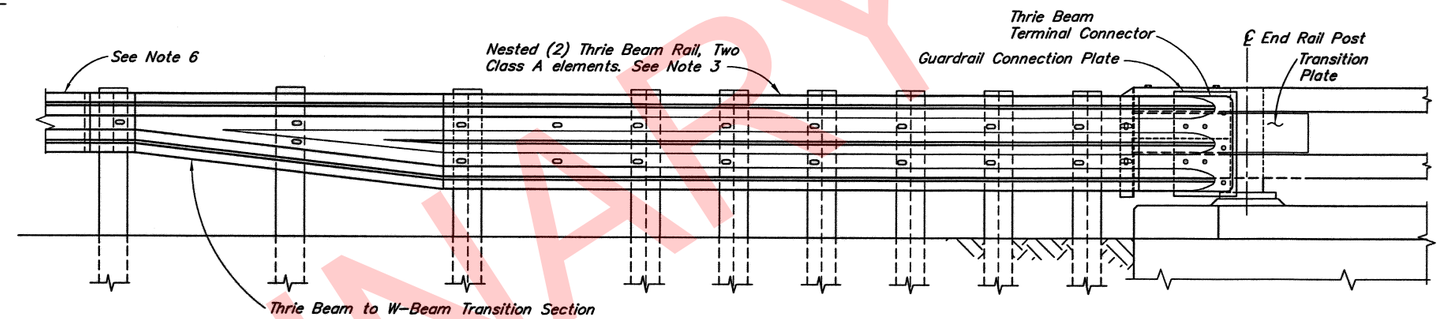

TRANSITION - ELEVATION

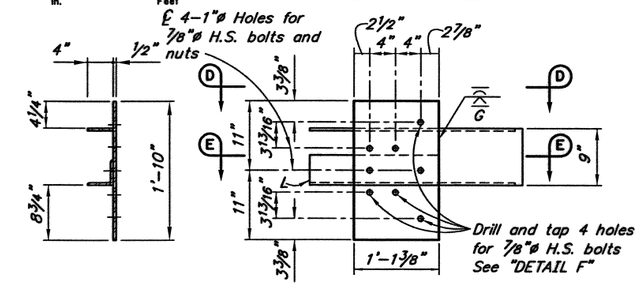

GUARDRAIL CONNECTION PLATE DETAILS

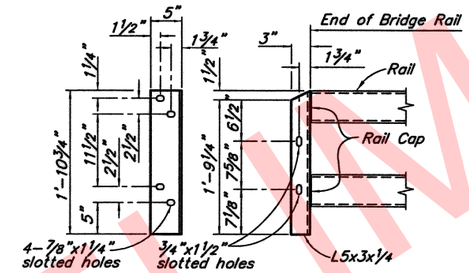

CONNECTION ANGLE A

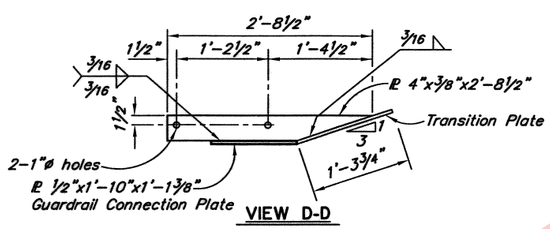

VIEW D-D

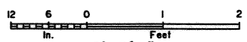

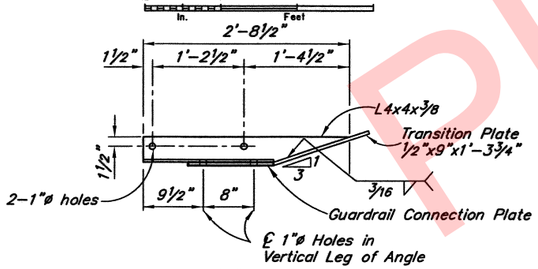

SECTION E-E

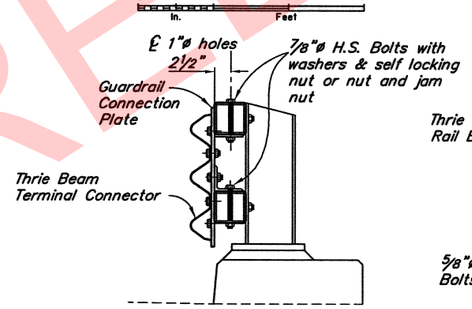

SECTION C-C

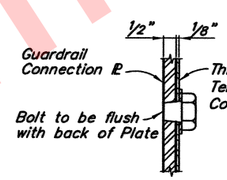

DETAIL F

No Scale

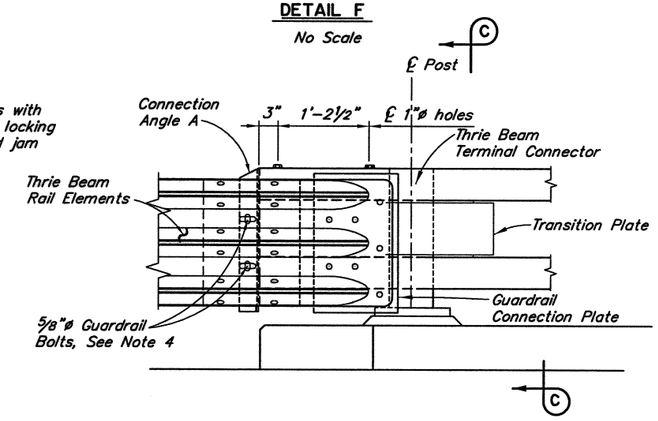

TRANSITION CONNECTION - ELEVATION

NOTES:

(E) = Existing

- - - - - = Existing

——— = Proposed

1. All guardrail and guardrail connection hardware to conform to AASHTO M 180. Use H.S. Bolts conforming to ASTM F1325, Grade A325. All other steel conforms to ASTM A709 Grade 36.
2. Conform to G-00, G-04S and G-10 of the Standard Drawings for all guardrail details not shown. No backup plate is required.
3. Lap approach guardrail to prevent snags from oncoming traffic.
4. Provide 4½" horizontal slots in approach guardrail. Adjust guardrail bolts for sliding fit.
5. Match height of existing or new rail elements and end treatments.
6. Thrie Beam transition to follow roadway alignment.
7. Verify controlling field dimensions before ordering or fabricating any material.

PRELIMINARY

DESIGNED BY: Mary McRae	CHECKED: Leslie Daugherty	PRELIMINARY PLAN	STATE OF ALASKA DEPARTMENT OF TRANSPORTATION AND PUBLIC FACILITIES BRIDGE SECTION 3132 Channel Drive Juneau, Alaska 99801 907-465-2975
DRAWN BY: Sam Sollie	CHECKED: Mary McRae		
QUANTITIES BY: Mary McRae	CHECKED: Leslie Daugherty		

SNOW RIVER WEST CHANNEL

SEWARD HIGHWAY

TRANSITION RAIL

BRIDGE NO. 603

DWG. NO. 12

R:\cad\603,605,607\603-TRANSITION Tue, Feb/27/18 03:00pm

STATE	PROJECT DESIGNATION	YEAR	SHEET NO.	TOTAL SHEETS
ALASKA	Z536100000	2018	NX	TtlShts

N14

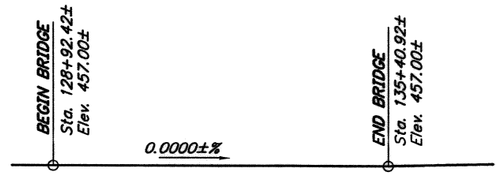

PROFILE GRADE
No Scale

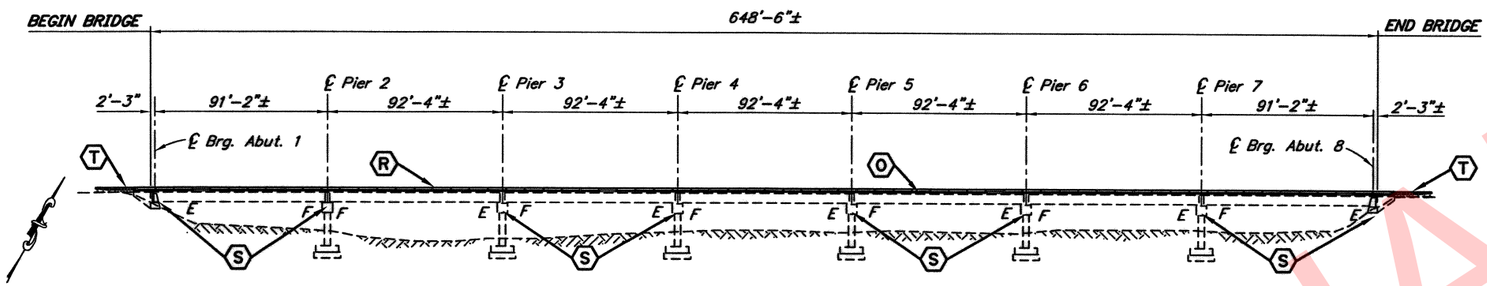

ELEVATION

10 0 40 80
Feet

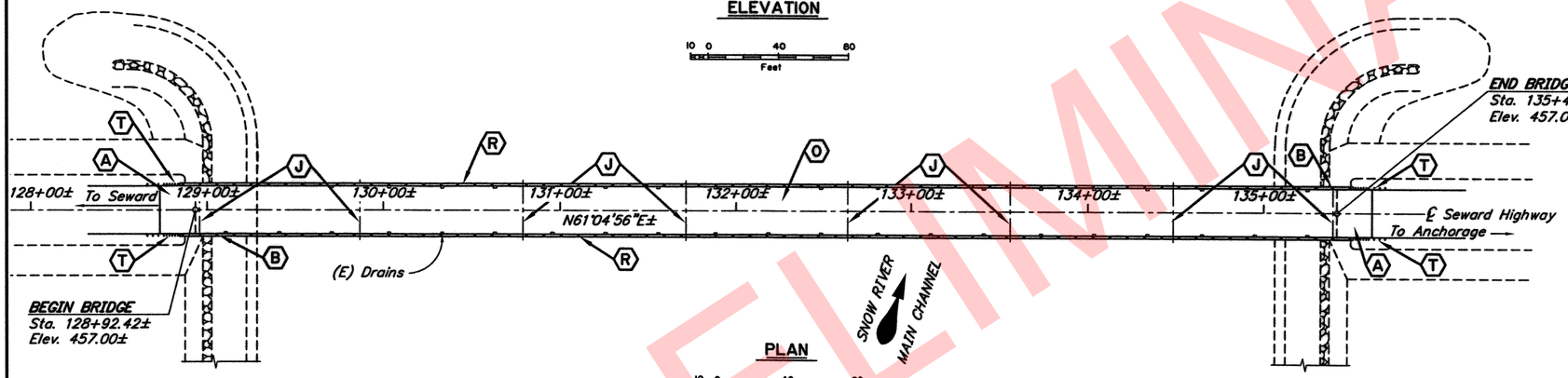

PLAN

10 0 40 80
Feet

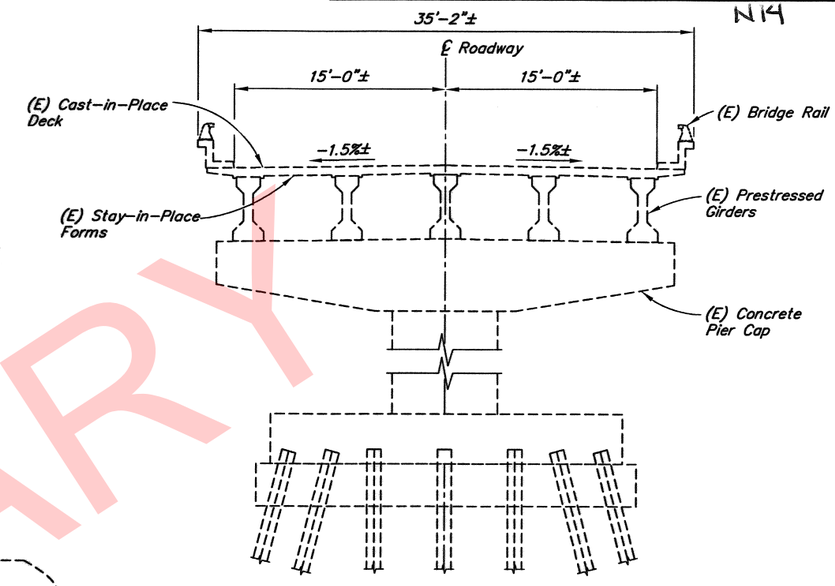

EXISTING TYPICAL SECTION

12 0 5 10
In. Feet

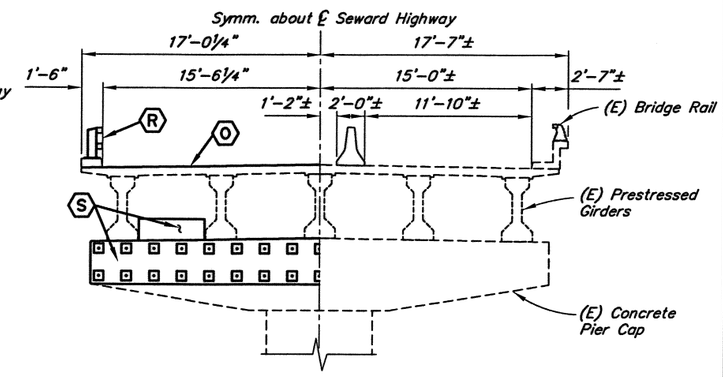

PROPOSED — STAGED CONSTRUCTION — EXISTING

12 0 5 10
In. Feet

DRAWING INDEX

TITLE	DWG. NO.
GENERAL LAYOUT	1
ABUTMENTS	2
WINGWALLS	3
PIERS	4
DECK DETAILS	5
OVERLAY	6
JOINT DETAILS	7
APPROACH SLABS	8
EXISTING RAIL DETAILS	9
STEEL BRIDGE RAILING	10
STEEL APPROACH RAILING	11
TRANSITION RAIL	12

LEGEND

- (A) = Install Approach Slab
- (B) = Bridge Number Plate
- (J) = Replace all expansion Joints
- (O) = Place Bridge Deck Overlay
- (R) = Replace Bridge Railing
- (S) = Install Shear Keys at Abutments and Piers and Widen Piers
- (T) = Install Transition Rail

REHABILITATION

PRELIMINARY PLAN

NOTES:

(E) = Existing
- - - - - = Existing
——— = Proposed

Bridge stations and elevations are based on as-built drawings.

For project stations and elevations, see roadway sheets.

Verify controlling field dimensions before ordering or fabricating any material.

PRELIMINARY

DESIGNED BY: Mary McRae	CHECKED: Leslie Daugherty	LAYOUT BY: Mary McRae	CHECKED BY: Leslie Daugherty
DRAWN BY: Sam Sollie	CHECKED: Mary McRae	SPECIFICATIONS BY: Mary McRae	P S & E COMPARED: Leslie Daugherty
QUANTITIES BY: Mary McRae	CHECKED: Leslie Daugherty	APPROVAL RECOMMENDED BY: Rich Pratt	

STATE OF ALASKA
DEPARTMENT OF TRANSPORTATION AND PUBLIC FACILITIES
BRIDGE SECTION
3132 Channel Drive
Juneau, Alaska 99801
907-465-2975

SNOW RIVER CENTER CHANNEL

SEWARD HIGHWAY

GENERAL LAYOUT

BRIDGE NO. 605

DWG. NO. 1

R:\cad\603,605,607\605-GENERAL Tue, Feb/27/18 03:03pm

STATE	PROJECT DESIGNATION	YEAR	SHEET NO.	TOTAL SHEETS
ALASKA	Z536100000	2018	N15	TtlShts

REINFORCING STEEL - ONE ABUTMENT

MARK	NOTE	SIZE	NO.	LENGTH	TYPE	BENDING DIAGRAM
A601	E	6	6	10'-2"	BENT	A601
A602	E	6	6	13'-8"	BENT	A602

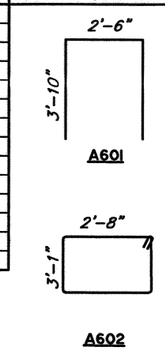

E - Epoxy-Coated

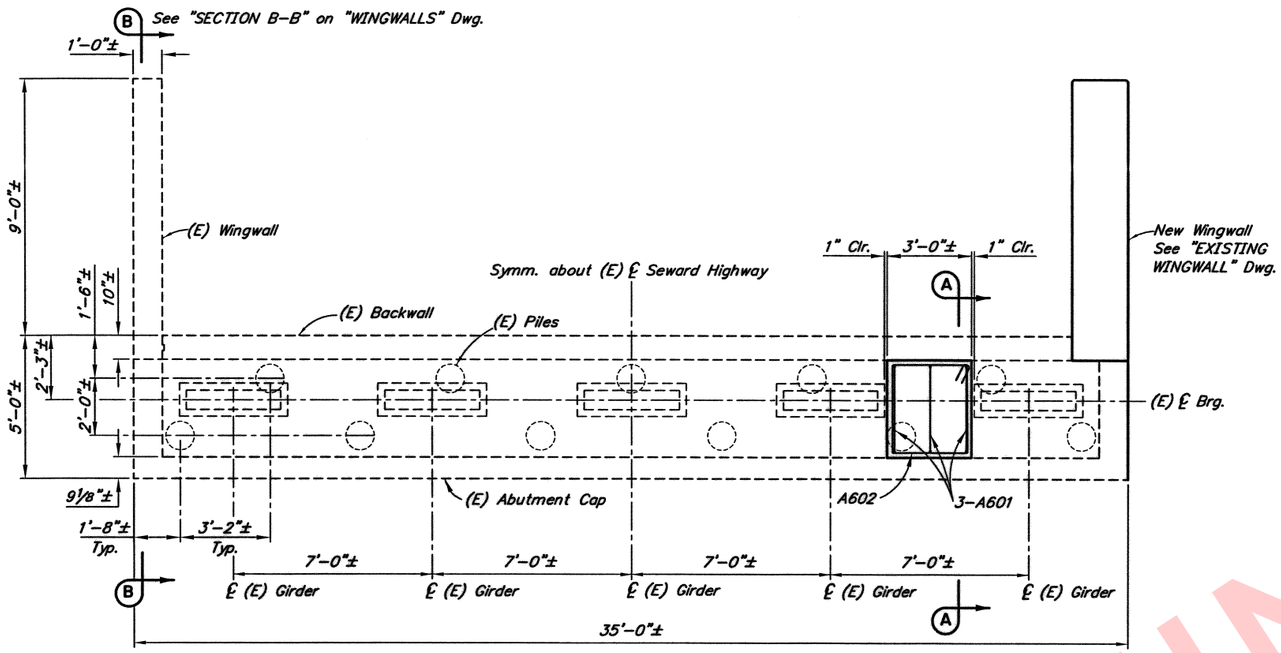

ABUTMENT PLAN

12 0 1 2 3 4 In. Feet

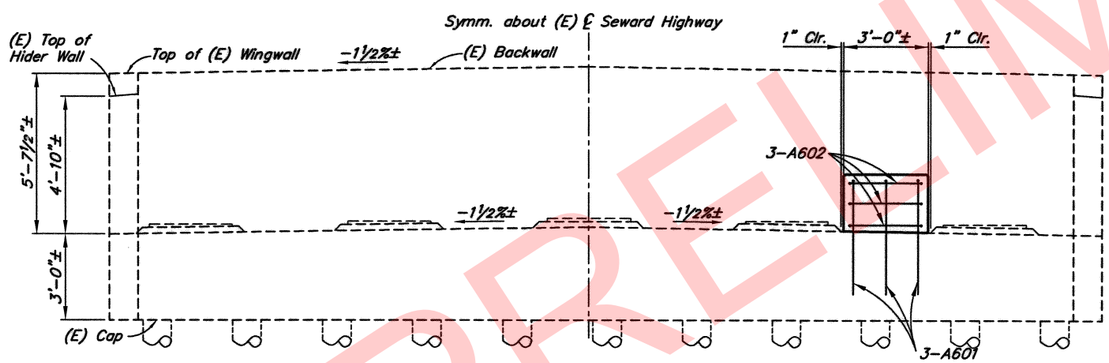

ABUTMENT ELEVATION

12 0 1 2 3 4 In. Feet

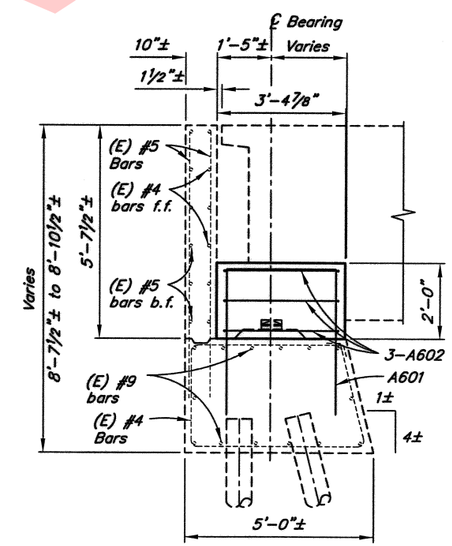

SECTION A-A

12 6 0 1 2 3 4 In. Feet

NOTE:

(E) = Existing

- - - - - = Existing

——— = Proposed

Verify controlling field dimensions before ordering or fabricating any material.

PRELIMINARY

DESIGNED BY: Mary McRae	CHECKED: Leslie Daugherty	PRELIMINARY PLAN	STATE OF ALASKA DEPARTMENT OF TRANSPORTATION AND PUBLIC FACILITIES BRIDGE SECTION 3132 Channel Drive Juneau, Alaska 99801 907-465-2975
DRAWN BY: Sam Sollie	CHECKED: Mary McRae		
QUANTITIES BY: Mary McRae	CHECKED: Leslie Daugherty		

SNOW RIVER CENTER CHANNEL

SEWARD HIGHWAY

ABUTMENTS

BRIDGE NO. 605

DWG. NO. 2

R:\cad\603,605,607\605-ABUT Tue, Feb/27/18 03:03pm

STATE	PROJECT DESIGNATION	YEAR	SHEET NO.	TOTAL SHEETS
ALASKA	Z536100000	2018	N16	TtlShts

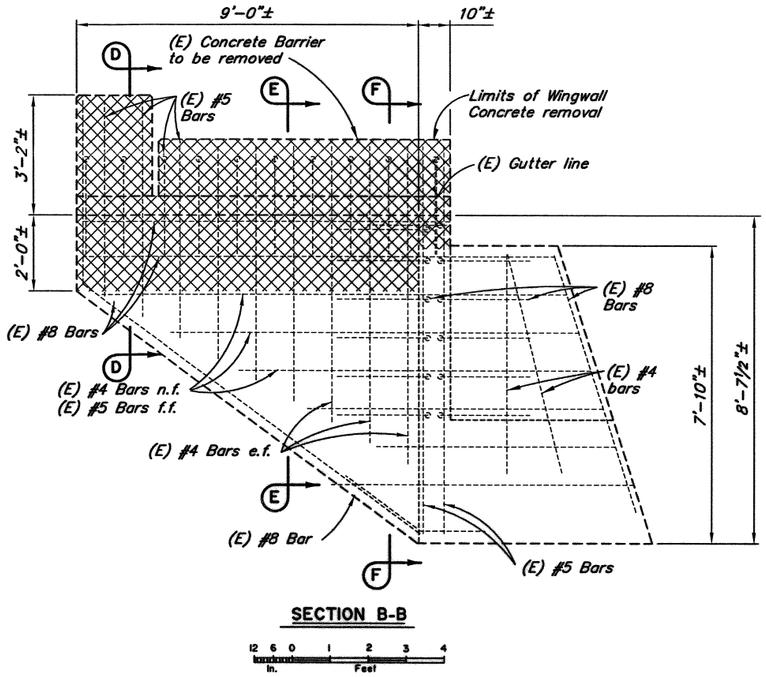

SECTION B-B

12 6 0 1 2 3 4
In. Feet

REINFORCING STEEL - ONE ABUTMENT

MARK	NOTE	SIZE	NO.	LENGTH	TYPE	BENDING DIAGRAM
W401	E	4	17	3'-0"	---	
W402	E	4	17	6'-10"	STIRRUP	
W403	E	4	17	5'-9"	STIRRUP	
W501	E	5	5	11'-8"	---	
W502	E	5	5	7'-8"	---	
W503	E	4	17	12'-8"	---	
W504	E	5	2	8'-8"	---	

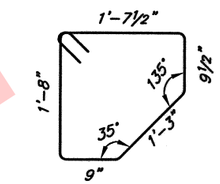

W402

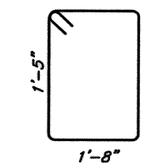

W403

E – Epoxy-Coated

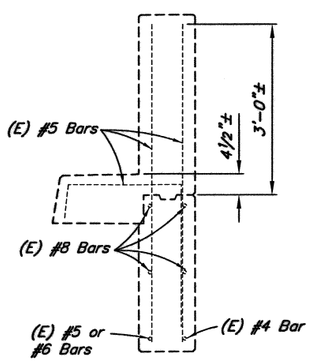

SECTION C-C

12 6 0 1 2 3
In. Feet

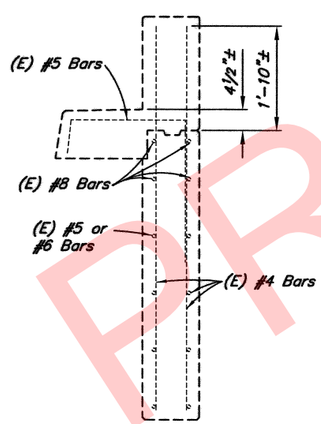

SECTION D-D

12 6 0 1 2 3
In. Feet

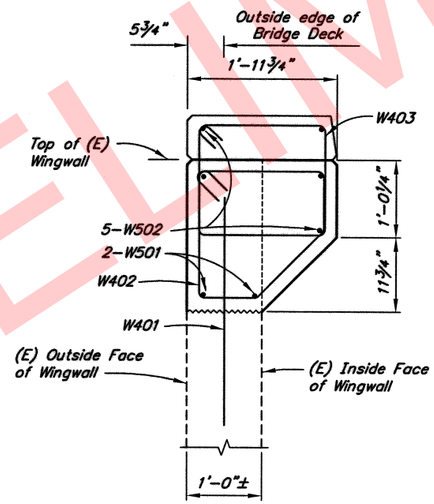

PROPOSED SECTION E-E

12 6 0 1 2
In. Feet

CORNER DETAILS

12 6 0 1 2 3 4
In. Feet

NOTE:

(E) = Existing

- - - - - = Existing

——— = Proposed

Verify controlling field dimensions before ordering or fabricating any material.

PRELIMINARY

DESIGNED BY: Mary McRae	CHECKED: Leslie Daugherty	PRELIMINARY PLAN	STATE OF ALASKA DEPARTMENT OF TRANSPORTATION AND PUBLIC FACILITIES BRIDGE SECTION 3132 Channel Drive Juneau, Alaska 99801 907-465-2975
DRAWN BY: Sam Sollie	CHECKED: Mary McRae		
QUANTITIES BY: Mary McRae	CHECKED: Leslie Daugherty		

SNOW RIVER CENTER CHANNEL

SEWARD HIGHWAY

WINGWALLS

BRIDGE NO. 605

DWG. NO. 3

R:\cad\603,605,607\605-WINGWALLS Tue, Feb/27/18 03:03pm

STATE	PROJECT DESIGNATION	YEAR	SHEET NO.	TOTAL SHEETS
ALASKA	Z536100000	2018	N17	TtlShts

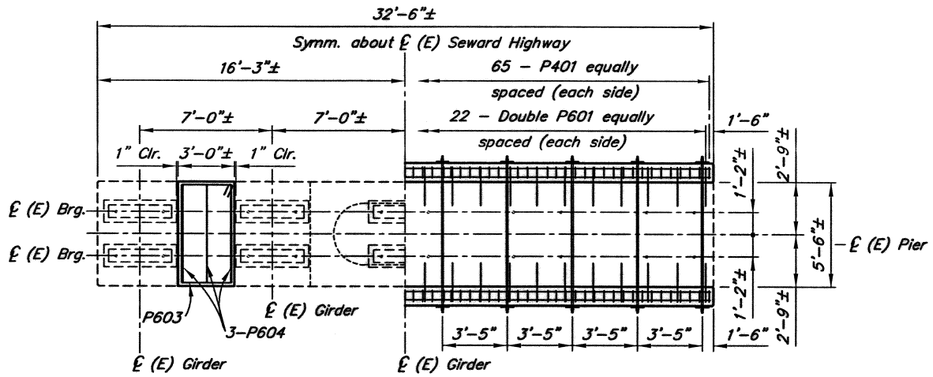

PLAN

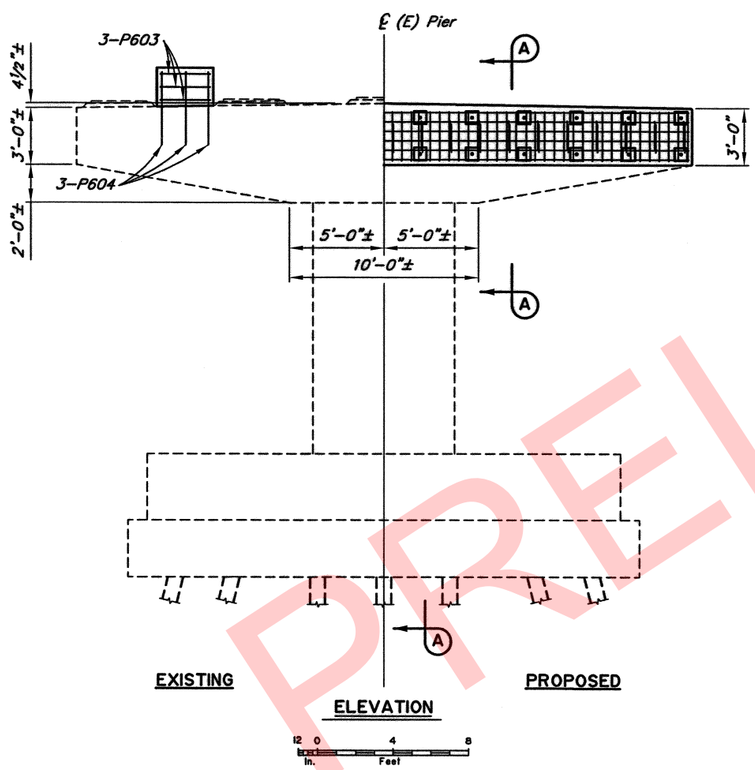

ELEVATION

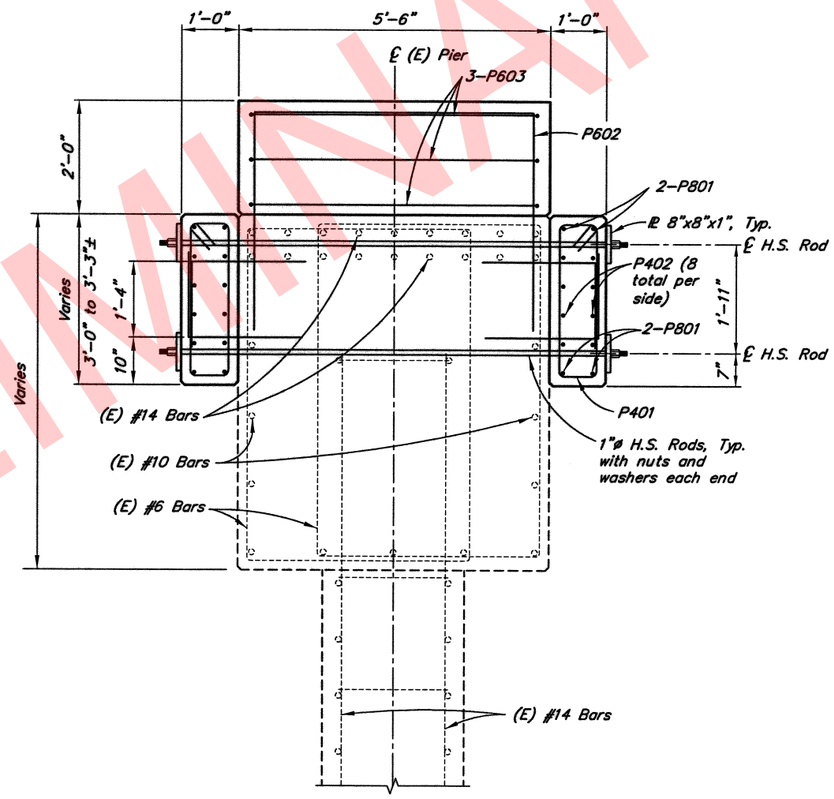

SECTION A-A

REINFORCING STEEL - PIER

MARK	NOTE	SIZE	NO.	LENGTH	TYPE
P401	E	4	130	7'-5"	STIRRUP
P402	E	4	16	32'-2"	---
P601	E	6	88	3'-6"	BENT
P602	E	6	6	12'-9"	BENT
P603	E	6	6	17'-0"	STIRRUP
P801	E	8	8	32'-2"	---

BENDING DIAGRAM

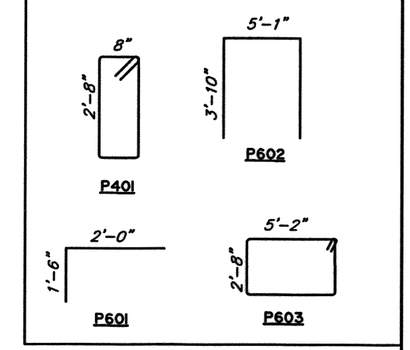

E – Epoxy-Coated

NOTE:

(E) = Existing

- - - - - = Existing

——— = Proposed

Verify controlling field dimensions before ordering or fabricating any material.

PRELIMINARY

DESIGNED BY: Mary McRae	CHECKED: Leslie Daugherty	PRELIMINARY PLAN	STATE OF ALASKA DEPARTMENT OF TRANSPORTATION AND PUBLIC FACILITIES BRIDGE SECTION 3132 Channel Drive Juneau, Alaska 99801 907-465-2975
DRAWN BY: Sam Sollie	CHECKED: Mary McRae		
QUANTITIES BY: Mary McRae	CHECKED: Leslie Daugherty		

SNOW RIVER CENTER CHANNEL

SEWARD HIGHWAY

PIERS

BRIDGE NO. 605

DWG. NO. 4

R:\cad\603,605,607\605-PIERS Tue, Feb/27/18 03:03pm

STATE	PROJECT DESIGNATION	YEAR	SHEET NO.	TOTAL SHEETS
ALASKA	Z536100000	2018	N18	

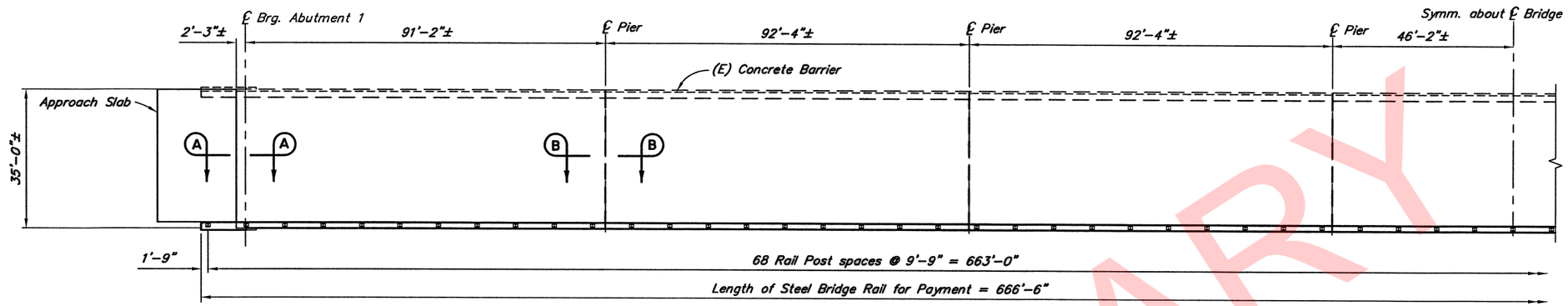

DECK HALF PLAN

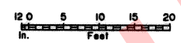

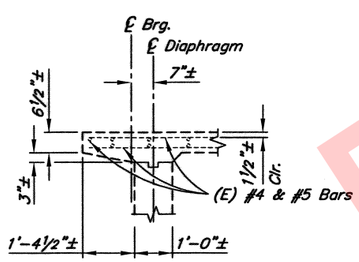

(E) SECTION A-A @ ABUTMENTS

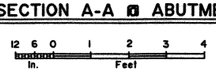

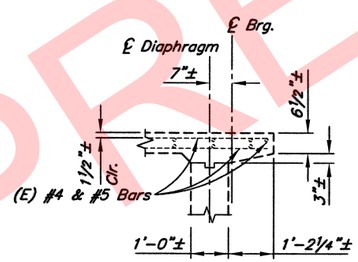

(E) SECTION B-B @ PIER

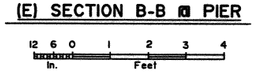

NOTE:

(E) = Existing

– – – – – = Existing

——— = Proposed

Verify controlling field dimensions before ordering or fabricating any material.

DESIGNED BY: Mary McRae	CHECKED: Leslie Daugherty	**PRELIMINARY PLAN**	STATE OF ALASKA DEPARTMENT OF TRANSPORTATION AND PUBLIC FACILITIES BRIDGE SECTION 3132 Channel Drive Juneau, Alaska 99801 907-465-2975
DRAWN BY: Sam Sallie	CHECKED: Mary McRae		
QUANTITIES BY: Mary McRae	CHECKED: Leslie Daugherty		

SNOW RIVER CENTER CHANNEL

SEWARD HIGHWAY

DECK DETAILS

BRIDGE NO. 605

DWG. NO. 5

R:\cad\603,605,607\605-DECK Tue, Feb/27/18 03:03pm

PRELIMINARY

STATE	PROJECT DESIGNATION	YEAR	SHEET NO.	TOTAL SHEETS
ALASKA	Z536100000	2018	N19	

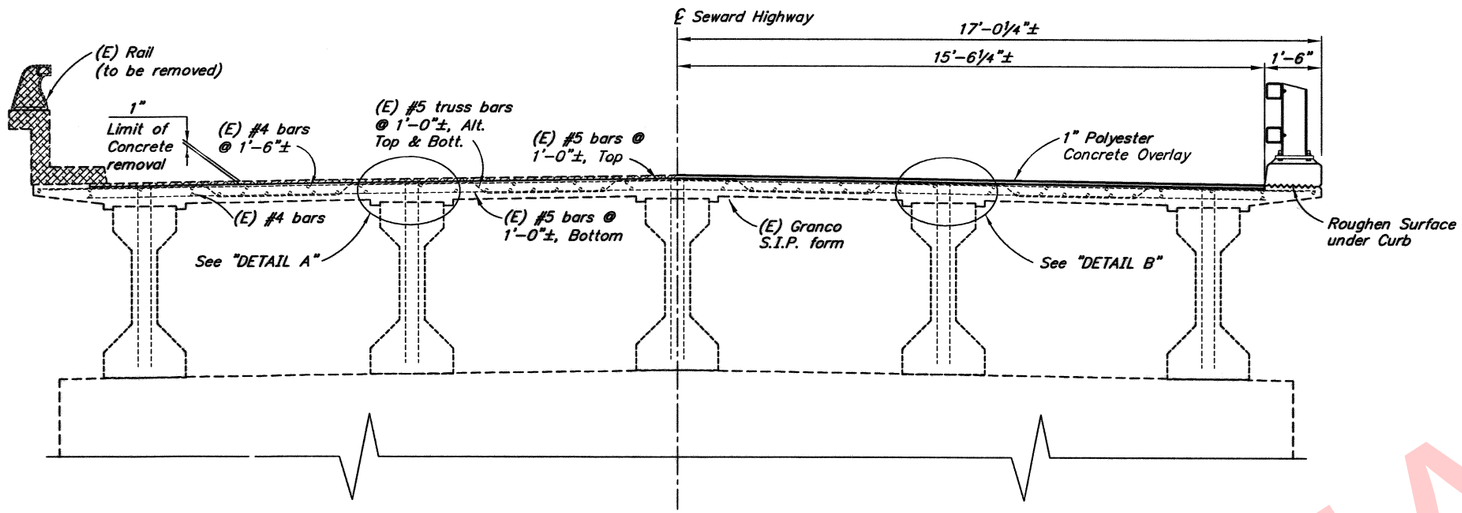

TYPICAL SECTION

12 6 0 1 2 3 4
In. Feet

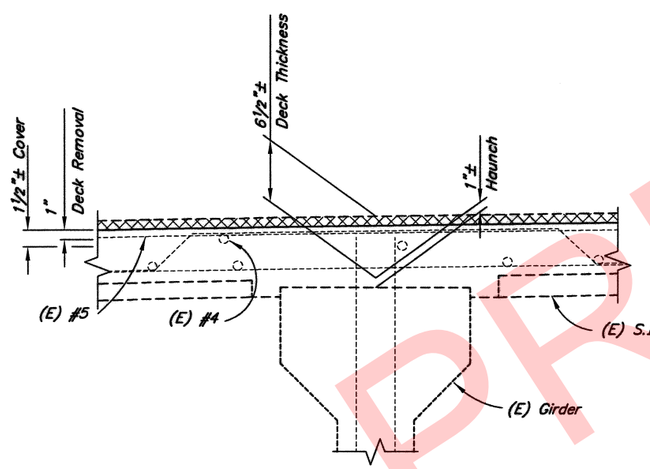

DETAIL A

12 6 0 1
In. Feet

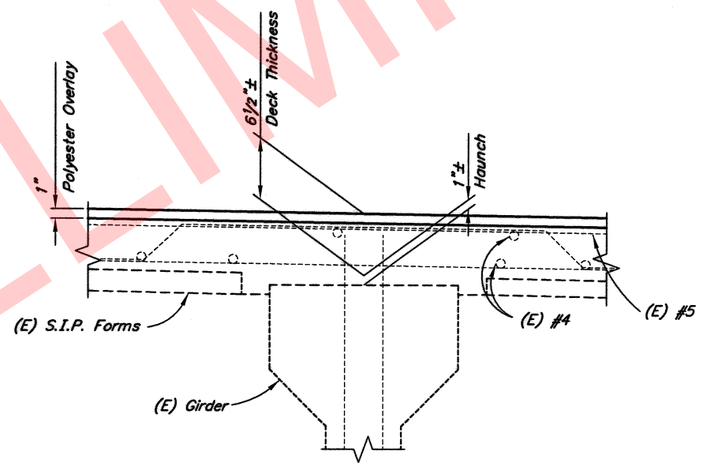

DETAIL B

12 6 0 1
In. Feet

NOTE:

(E) = Existing
- - - - - = Existing
——— = Proposed

Verify controlling field dimensions before ordering or fabricating any material.

PRELIMINARY

DESIGNED BY: Mary McRae	CHECKED: Leslie Daugherty	**PRELIMINARY PLAN**	STATE OF ALASKA DEPARTMENT OF TRANSPORTATION AND PUBLIC FACILITIES BRIDGE SECTION 3132 Channel Drive Juneau, Alaska 99801 907-465-2975
DRAWN BY: Sam Sollie	CHECKED: Mary McRae		
QUANTITIES BY: Mary McRae	CHECKED: Leslie Daugherty		

SNOW RIVER CENTER CHANNEL

SEWARD HIGHWAY

OVERLAY

BRIDGE NO. 605

DWG. NO. 6

R:\cad\603,605,607\605-OVERLAY Tue, Feb/27/18 03:03pm

STATE	PROJECT DESIGNATION	YEAR	SHEET NO.	TOTAL SHEETS
ALASKA	Z536100000	2018	N20	

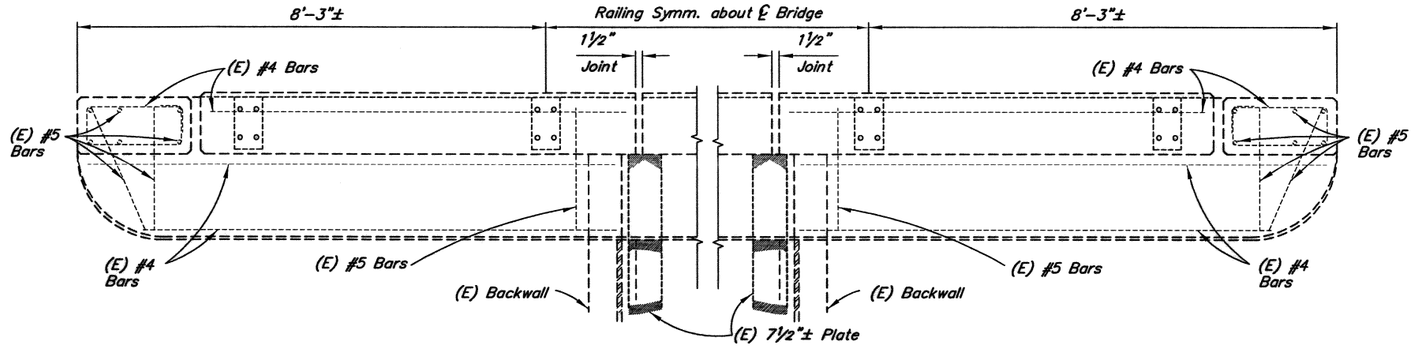

PLAN - TRANSVERSE JOINT DETAIL

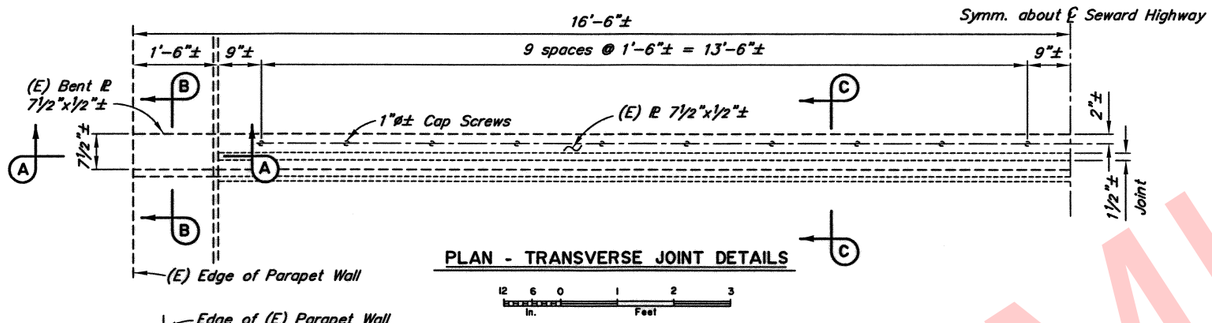

PLAN - TRANSVERSE JOINT DETAILS

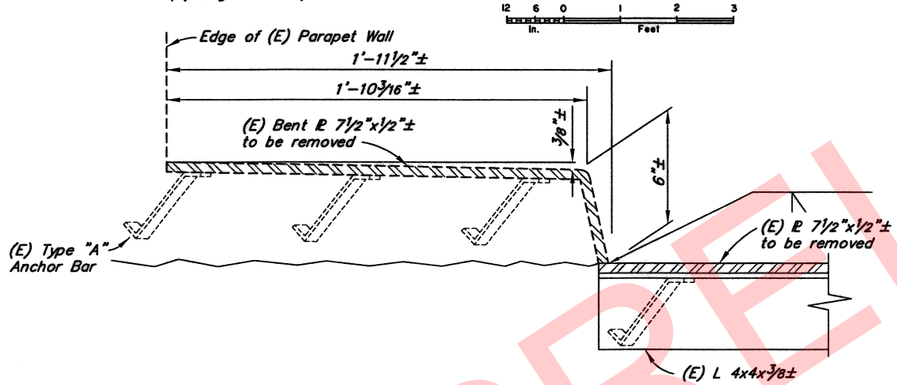

SECTION A-A

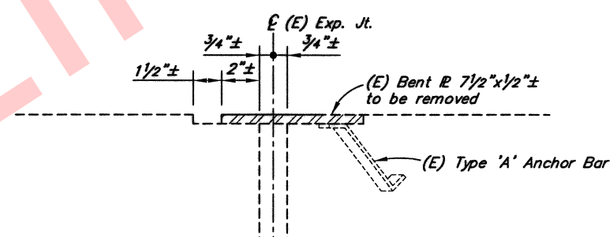

SECTION B-B

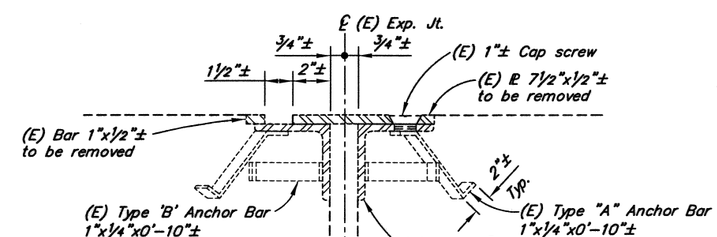

SECTION C-C

NOTE:

(E) = Existing

- - - - - = Existing

——— = Proposed

1. Verify controlling field dimensions before ordering or fabricating any material.
2. Remove exposed steel joint. Leave embedded steel hardware intact.

PRELIMINARY

DESIGNED BY: Mary McRae	CHECKED: Leslie Daugherty	PRELIMINARY PLAN	STATE OF ALASKA DEPARTMENT OF TRANSPORTATION AND PUBLIC FACILITIES BRIDGE SECTION 3132 Channel Drive Juneau, Alaska 99801 907-465-2975
DRAWN BY: Sam Sollie	CHECKED: Mary McRae		
QUANTITIES BY: Mary McRae	CHECKED: Leslie Daugherty		

SNOW RIVER CENTER CHANNEL

SEWARD HIGHWAY

JOINT DETAILS

BRIDGE NO. 605

DWG. NO. 7

R:\cad\603,605,607\605-JT. Tue, Feb/27/18 03:03pm

STATE	PROJECT DESIGNATION	YEAR	SHEET NO.	TOTAL SHEETS
ALASKA	Z536100000	2018	N21	

REINFORCING STEEL - ONE SLAB

MARK	NOTE	SIZE	NO.	LENGTH	TYPE	BENDING DIAGRAM
S401	M,S	4	64	45'-8"	---	
S501		5	62	20'-5"	---	
S502		5	33	3'-6"	BENT	
S801		8	62	20'-5"	---	

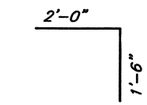

S502

M - Match cross slope
S - Splice permitted. Splice length not included

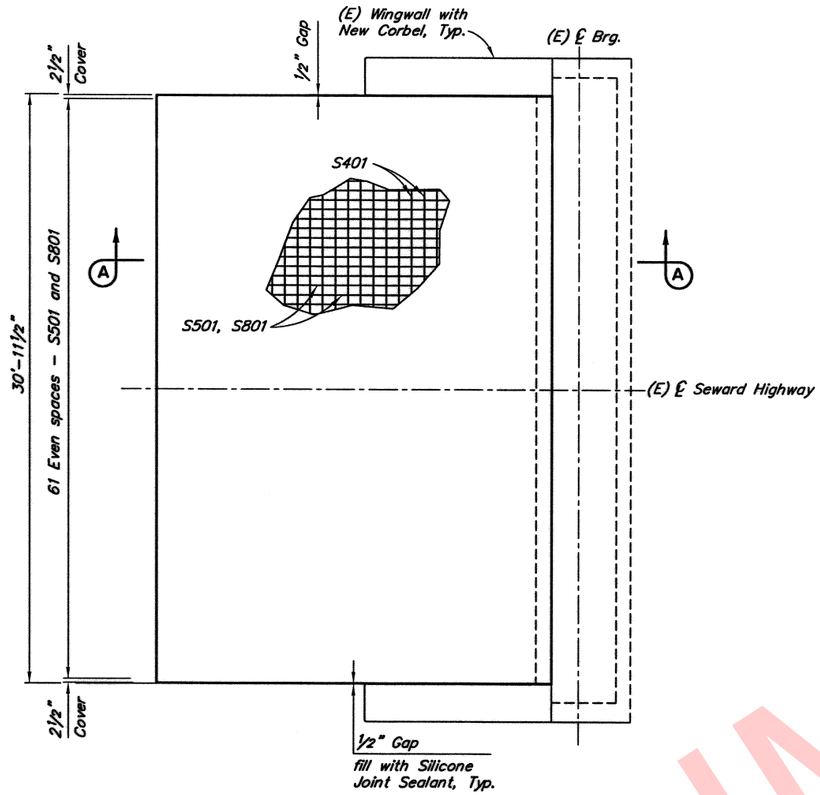

PLAN

(Abutment 1 shown Abutment 8 similar)

12 0 4 8
In. Feet

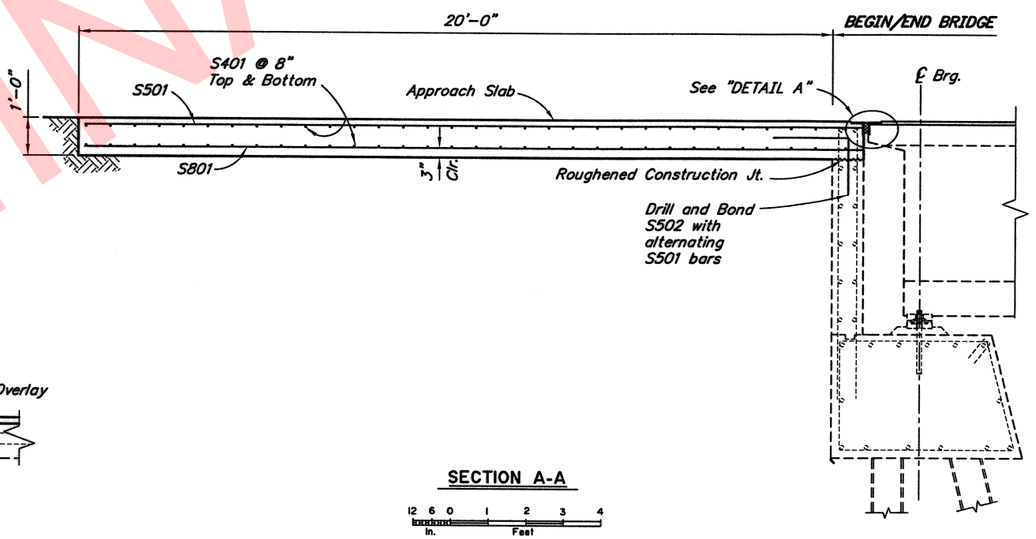

SECTION A-A

12 6 0 1 2 3 4
In. Feet

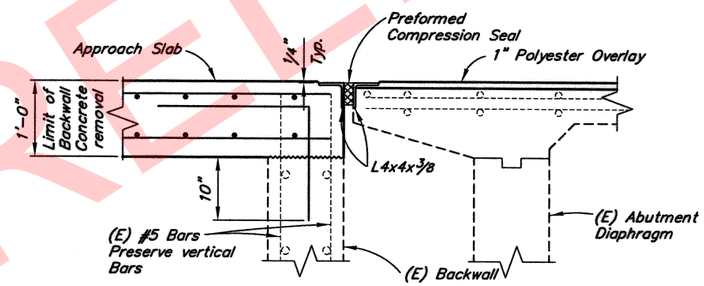

DETAIL A

12 6 0 1 2
In. Feet

NOTE:

(E) = Existing
- - - - - = Existing
——— = Proposed

Verify controlling field dimensions before ordering or fabricating any material.

Cast Approach Slab last.

PRELIMINARY

DESIGNED BY: Mary McRae	CHECKED: Leslie Daugherty	PRELIMINARY PLAN	STATE OF ALASKA DEPARTMENT OF TRANSPORTATION AND PUBLIC FACILITIES BRIDGE SECTION 3132 Channel Drive Juneau, Alaska 99801 907-465-2975
DRAWN BY: Sam Sallie	CHECKED: Mary McRae		
QUANTITIES BY: Mary McRae	CHECKED: Leslie Daugherty		

SNOW RIVER CENTER CHANNEL

SEWARD HIGHWAY

APPROACH SLABS

BRIDGE NO. 605

DWG. NO. 8

R:\cad\603,605,607\605-APPROACH SLABS Tue, Feb/27/18 03:03pm

STATE	PROJECT DESIGNATION	YEAR	SHEET NO.	TOTAL SHEETS
ALASKA	Z536100000	2018	N22	

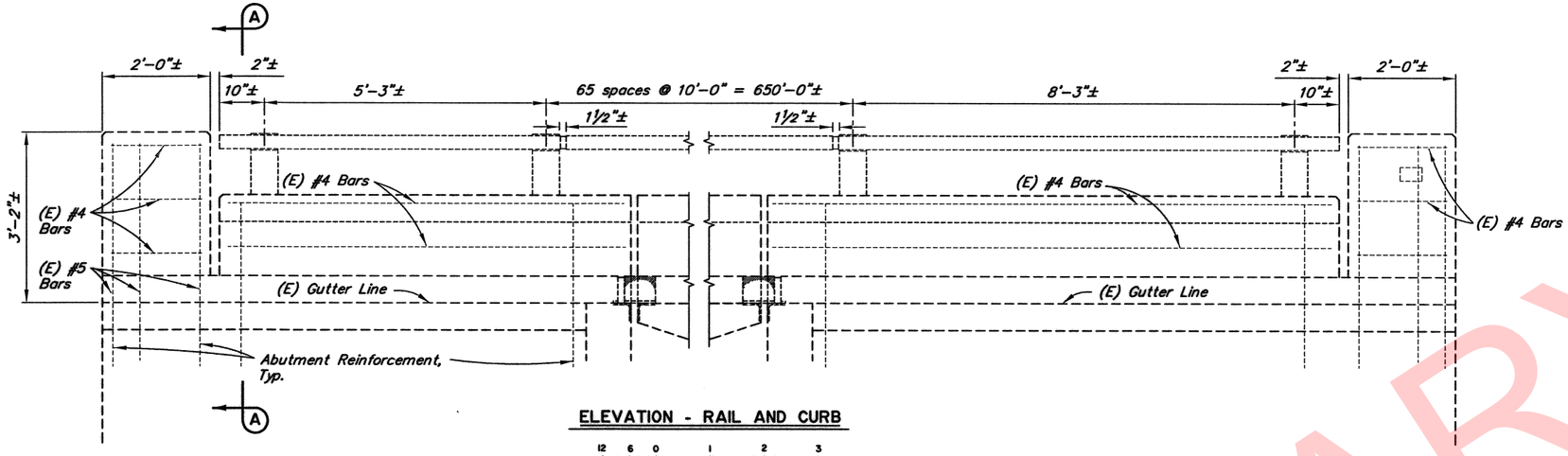

ELEVATION - RAIL AND CURB

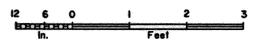

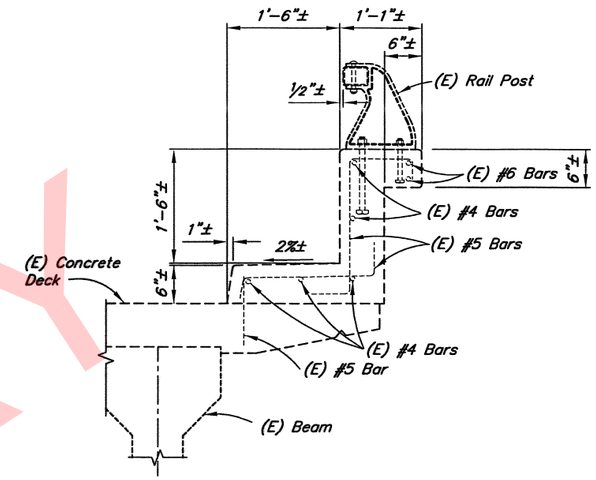

EXISTING TYPICAL SECTION - CURB AND RAILING

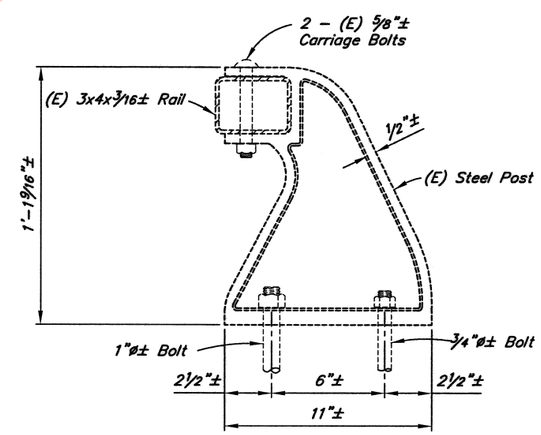

SIDE VIEW

EXISTING RAIL AND RAIL POST DETAILS

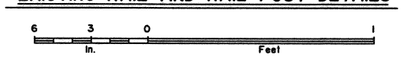

NOTE:

(E) = Existing

----- = Existing

——— = Proposed

Verify controlling field dimensions before ordering or fabricating any material.

PRELIMINARY

DESIGNED BY: Mary McRae	CHECKED: Leslie Daugherty	PRELIMINARY PLAN	STATE OF ALASKA DEPARTMENT OF TRANSPORTATION AND PUBLIC FACILITIES BRIDGE SECTION 3132 Channel Drive Juneau, Alaska 99801 907-465-2975
DRAWN BY: Sam Sollie	CHECKED: Mary McRae		
QUANTITIES BY: Mary McRae	CHECKED: Leslie Daugherty		

SNOW RIVER CENTER CHANNEL

SEWARD HIGHWAY

EXISTING RAIL DETAILS

BRIDGE NO. 605

DWG. NO. 9

R:\cad\603,605,607\605-E RAIL Tue, Feb/27/18 03:03pm

STATE	PROJECT DESIGNATION	YEAR	SHEET NO.	TOTAL SHEETS
ALASKA	Z536100000	2018	N23	TtlShts

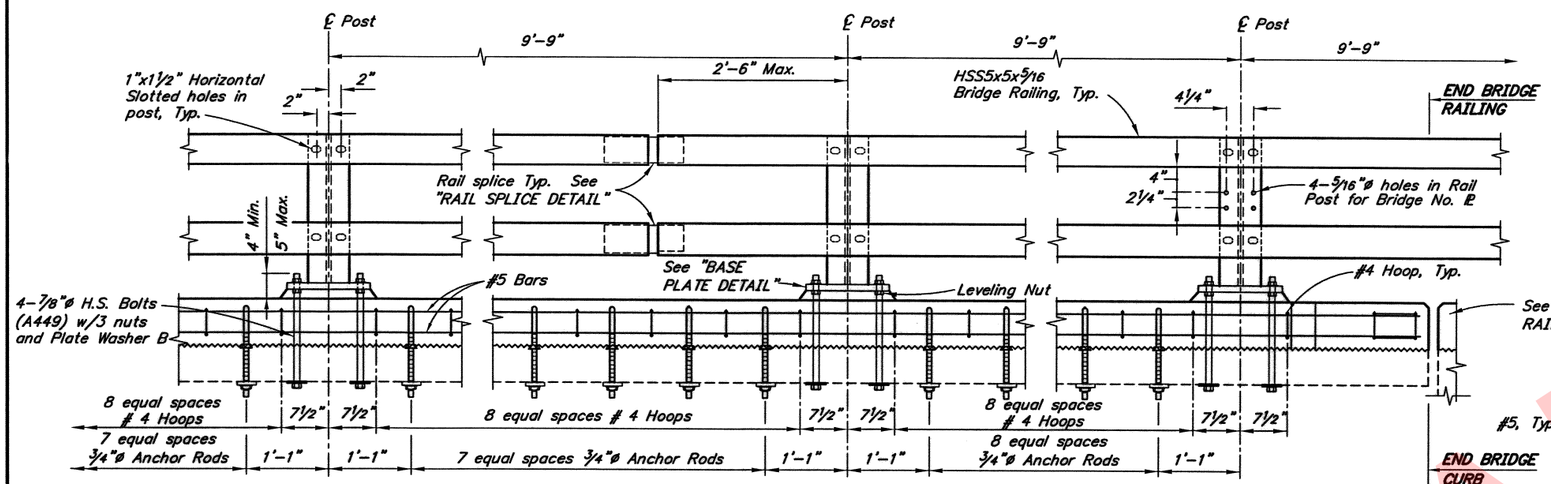

TYPICAL POST ELEVATION

EXPANSION JOINT

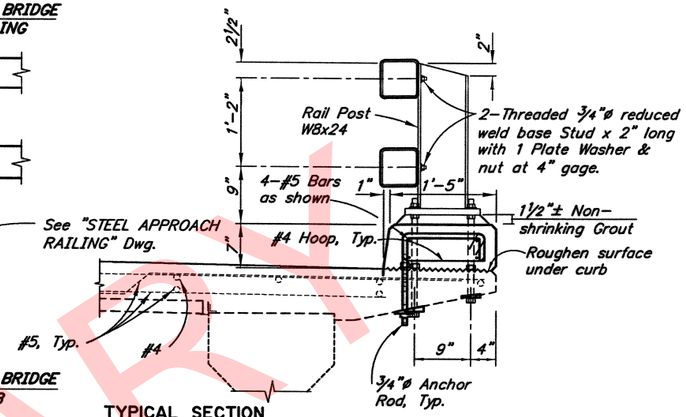

TYPICAL SECTION

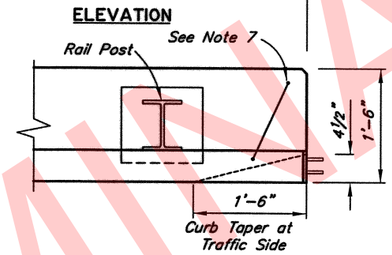

ELEVATION

PLAN

END POST DETAIL

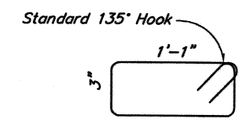

#4 HOOP DETAIL

No Scale

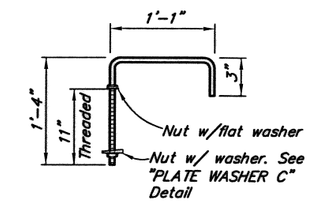

¾"ø ANCHOR ROD

No Scale

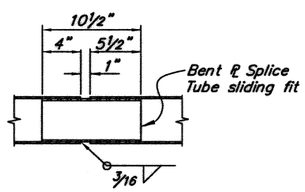

RAIL SPLICE DETAIL

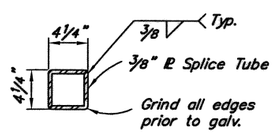

SPLICE TUBE

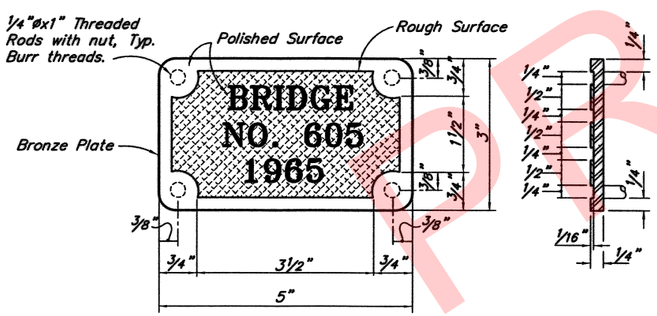

BRONZE BRIDGE NO. PLATE

No Scale

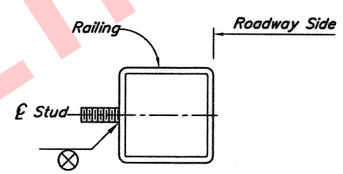

RAILING STUD DETAIL

No Scale

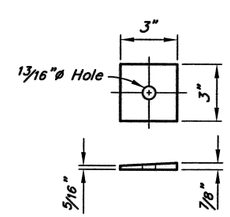

PLATE WASHER C (F436)

No Scale

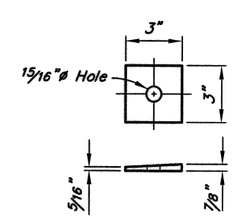

PLATE WASHER B (F436)

No Scale

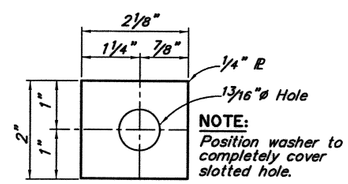

NOTE:
Position washer to completely cover slotted hole.

PLATE WASHER

No Scale

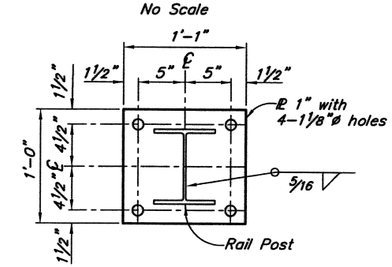

BASE PLATE DETAIL

NOTES:

(E) = Existing

- - - - - = Existing

——— = Proposed

1. Furnish and install two bridge no. plates. Use "Century" type style lettering. Use studs and nuts that conform to UNS C65100 or UNS C65500. Braze ¼"ø threaded rod to back of plate with nut (4 req'd.). Use tamperproof nuts.
2. Locate bridge no. plates as shown on "GENERAL LAYOUT" Dwg. (2 total)
3. Provide railing expansion joints at 50'-0" maximum intervals. Railing shall be continuous over 2 posts minimum. Railing expansion joints are required in rail panels that span bridge expansion joints.
4. See "DECK DETAILS" Dwg. for rail post spacing.
5. Install bridge rail posts plumb.
6. Use grout with a minimum 24 hour f'c of 3,000 psi.
7. Angle bars to accommodate curb taper.
8. Core and bond H.S. bolts through the existing deck and existing rail hardware. Drill and bond ¾"ø anchor rods through the existing deck. Adjust anchor rod spacing to avoid existing reinforcing.
9. Verify all controlling field dimensions before ordering or fabricating any material.

PRELIMINARY

DESIGNED BY: Mary McRae	CHECKED: Leslie Daugherty	PRELIMINARY PLAN	STATE OF ALASKA DEPARTMENT OF TRANSPORTATION AND PUBLIC FACILITIES BRIDGE SECTION 3132 Channel Drive Juneau, Alaska 99801 907-465-2975
DRAWN BY: Sam Sollie	CHECKED: Mary McRae		
QUANTITIES BY: Mary McRae	CHECKED: Leslie Daugherty		

SNOW RIVER CENTER CHANNEL

SEWARD HIGHWAY

STEEL BRIDGE RAILING

BRIDGE NO. 605

DWG. NO. 10

R:\ced\603,605,607\605-RAILING Tue, Feb/27/18 03:03pm

STATE	PROJECT DESIGNATION	YEAR	SHEET NO.	TOTAL SHEETS
ALASKA	Z536100000	2018	N24	

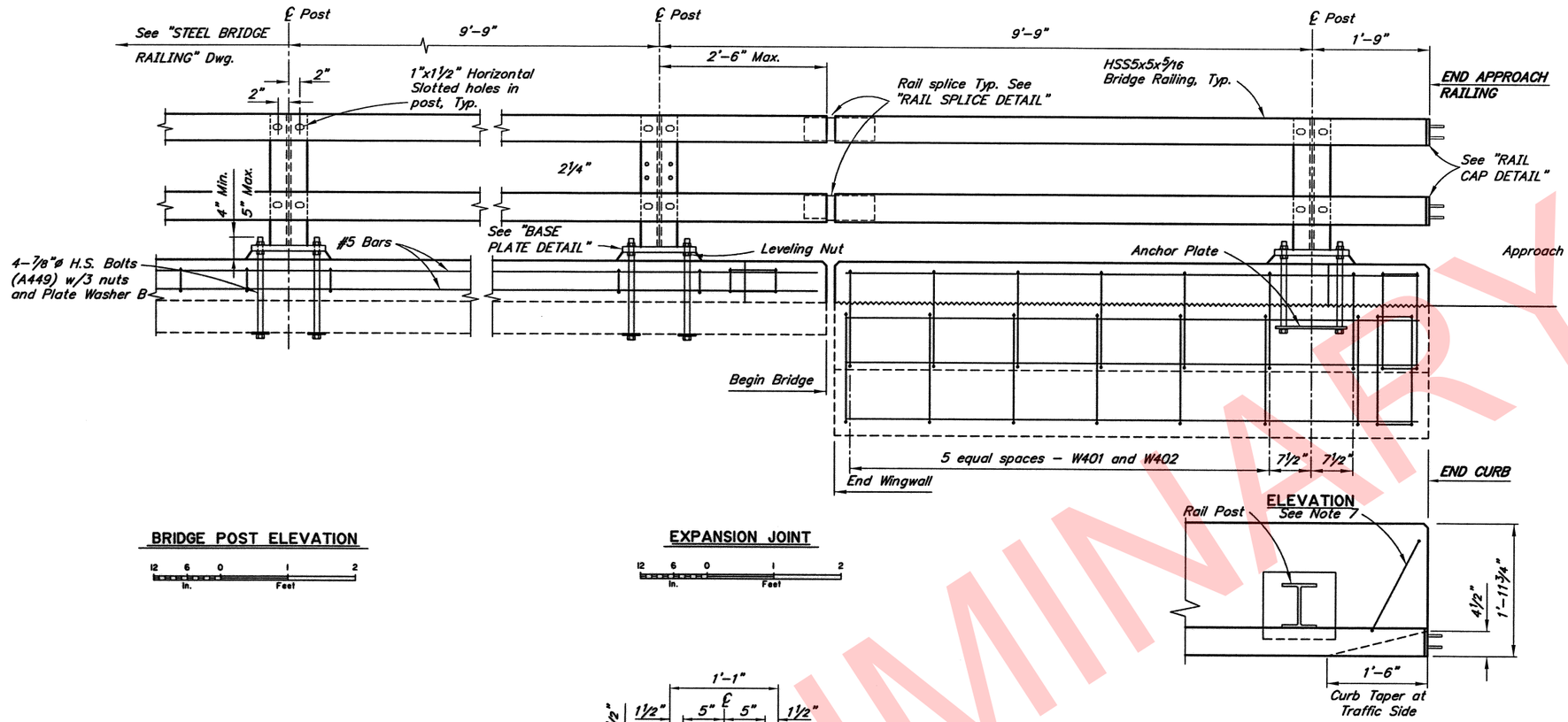

BRIDGE POST ELEVATION

EXPANSION JOINT

END POST DETAIL

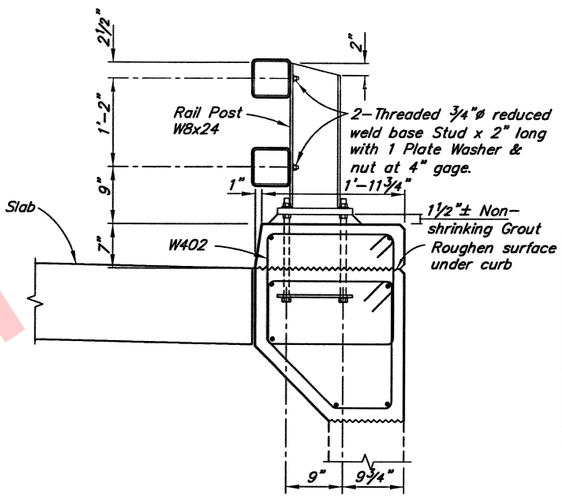

TYPICAL SECTION

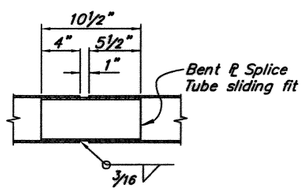

RAIL SPLICE DETAIL

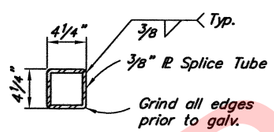

SPLICE TUBE

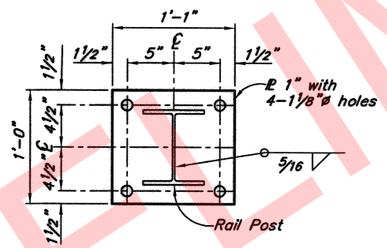

BASE PLATE DETAIL

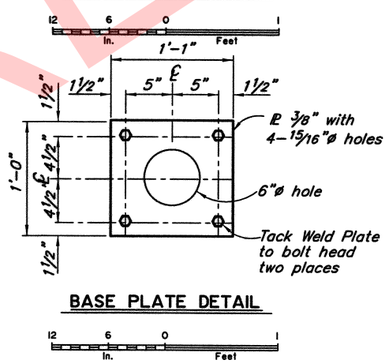

BASE PLATE DETAIL

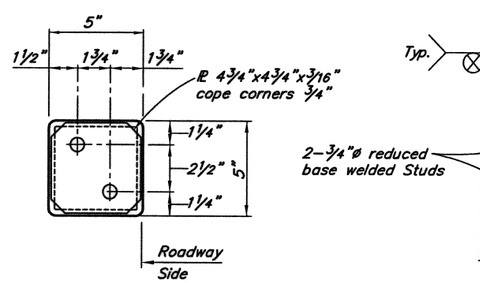

RAIL CAP DETAIL

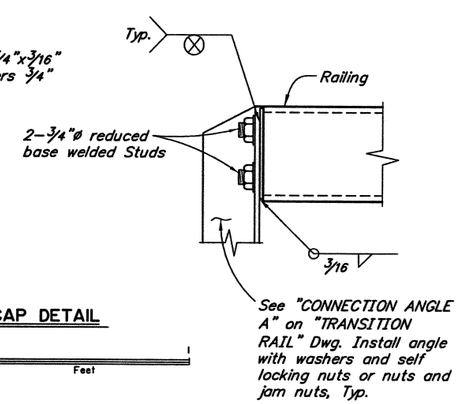

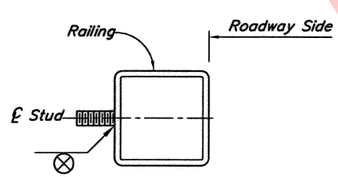

RAILING STUD DETAIL

No Scale

NOTES:

(E) = Existing

- - - - - = Existing

——— = Proposed

1. Provide railing expansion joints at 50'-0" maximum intervals. Railing shall be continuous over 2 posts minimum. Railing expansion joints are required in rail panels that span bridge expansion joints.
2. See "DECK DETAILS" Dwg. for rail post spacing.
3. Install bridge rail posts plumb.
4. Use grout with a minimum 24 hour f'c of 3,000 psi.
5. Angle bars to accommodate curb taper.
6. Core and bond H.S. bolts through the existing deck and existing rail hardware. Drill and bond ¾"ø anchor rods through the existing deck. Adjust anchor rod spacing to avoid existing reinforcing.
7. Verify all controlling field dimensions before ordering or fabricating any material.

PRELIMINARY

DESIGNED BY: Mary McRae	CHECKED: Leslie Daugherty	PRELIMINARY PLAN	STATE OF ALASKA DEPARTMENT OF TRANSPORTATION AND PUBLIC FACILITIES BRIDGE SECTION 3132 Channel Drive Juneau, Alaska 99801 907-465-2975
DRAWN BY: Sam Sollie	CHECKED: Mary McRae		
QUANTITIES BY: Mary McRae	CHECKED: Leslie Daugherty		

SNOW RIVER CENTER CHANNEL

SEWARD HIGHWAY

STEEL APPROACH RAILING

BRIDGE NO. 605

DWG. NO. 11

R:\cad\603,605,607\605-RAILING (2) Tue, Feb/27/18 03:03pm

STATE	PROJECT DESIGNATION	YEAR	SHEET NO.	TOTAL SHEETS
ALASKA	Z536100000	2018	N25	

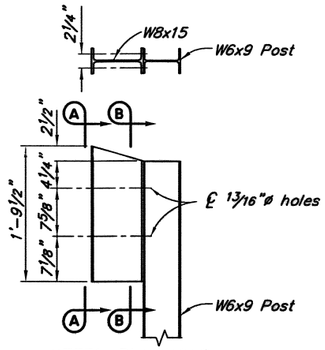

STEEL BLOCKOUT

See Note 2 for additional details

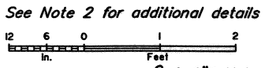

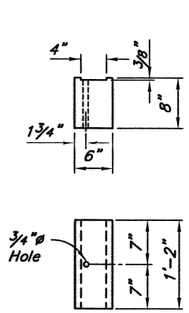

WOOD BLOCKOUT

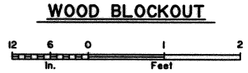

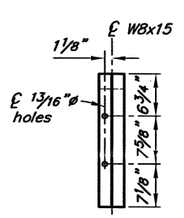

VIEW A-A

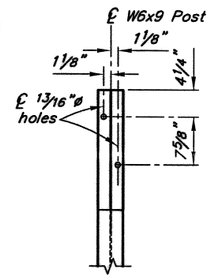

SECTION B-B

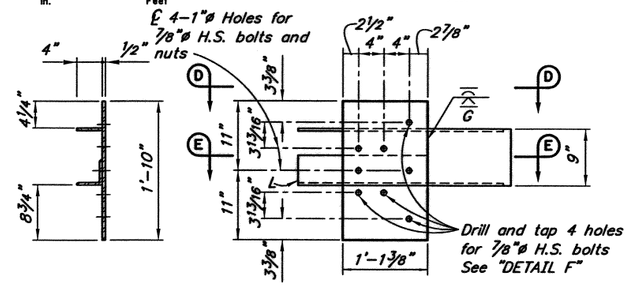

GUARDRAIL CONNECTION PLATE DETAILS

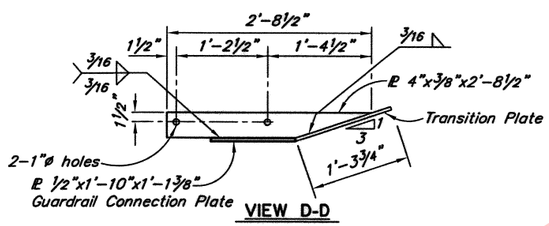

VIEW D-D

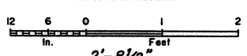

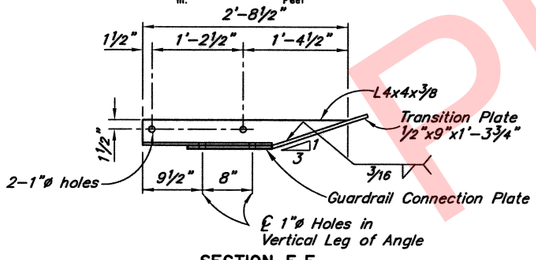

SECTION E-E

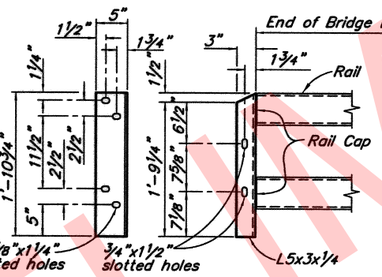

CONNECTION ANGLE A

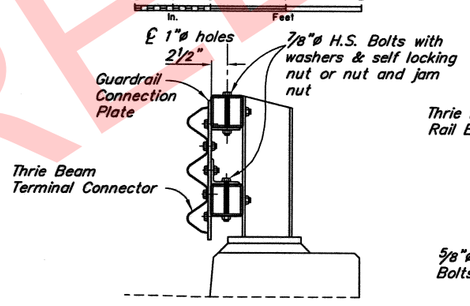

SECTION C-C

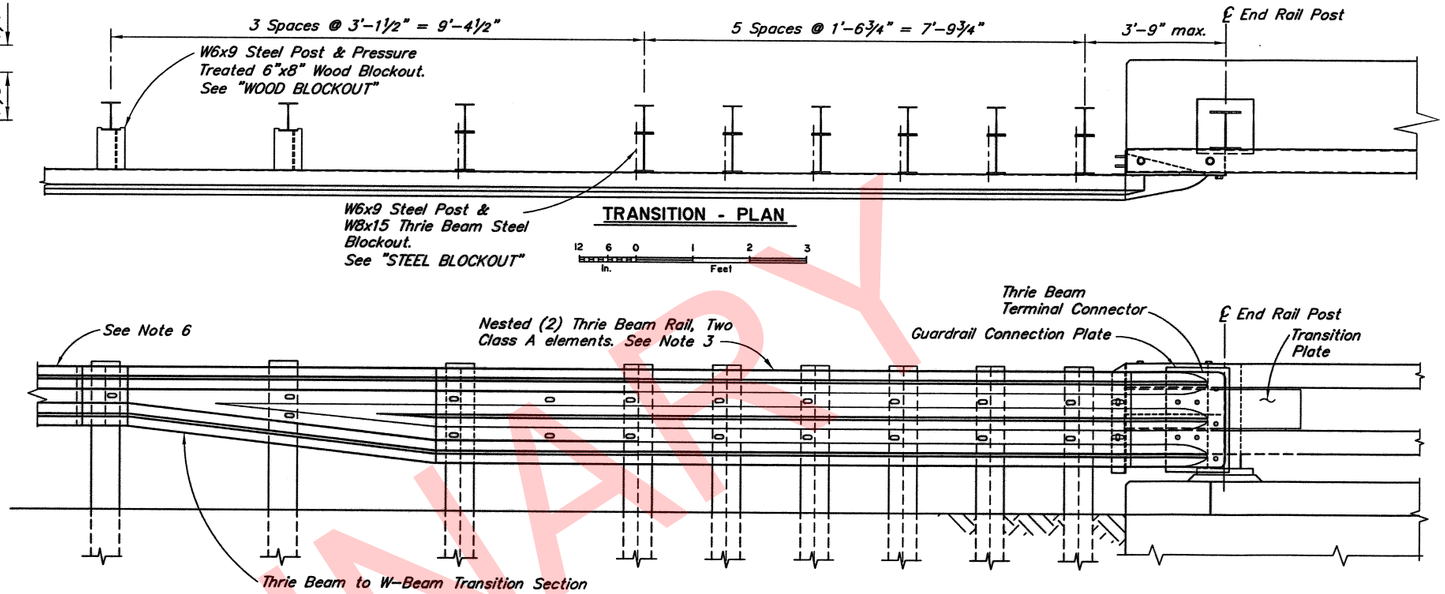

TRANSITION - PLAN

TRANSITION - ELEVATION

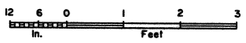

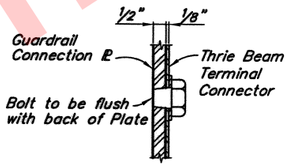

DETAIL F

No Scale

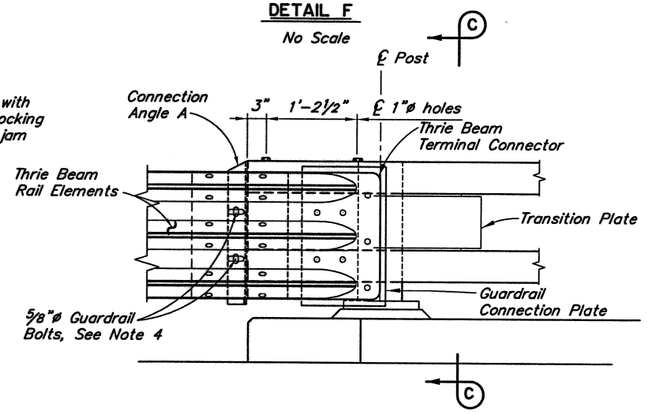

TRANSITION CONNECTION - ELEVATION

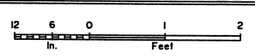

NOTES:

(E) = Existing

----- = Existing

——— = Proposed

1. All guardrail and guardrail connection hardware to conform to AASHTO M 180. Use H.S. Bolts conforming to ASTM A325. All other steel conforms to ASTM A709 Grade 36.
2. Conform to G-00, G-04S and G-10 of the Standard Drawings for all guardrail details not shown. No backup plate is required.
3. Lap approach guardrail to prevent snags from oncoming traffic.
4. Provide 4½" horizontal slots in approach guardrail. Adjust guardrail bolts for sliding fit.
5. Match height of existing or new rail elements and end treatments.
6. Thrie Beam transition to follow roadway alignment.
7. Verify controlling field dimensions before ordering or fabricating any material.

PRELIMINARY

DESIGNED BY: Mary McRae	CHECKED: Leslie Daugherty	PRELIMINARY PLAN	STATE OF ALASKA DEPARTMENT OF TRANSPORTATION AND PUBLIC FACILITIES BRIDGE SECTION 3132 Channel Drive Juneau, Alaska 99801 907-465-2975
DRAWN BY: Sam Sollie	CHECKED: Mary McRae		
QUANTITIES BY: Mary McRae	CHECKED: Leslie Daugherty		

SNOW RIVER CENTER CHANNEL

SEWARD HIGHWAY

TRANSITION RAIL

BRIDGE NO. 605

DWG. NO. 12

R:\cad\603,605,607\605-THRIE BEAM Tue, Feb/27/18 03:04pm

STATE	PROJECT DESIGNATION	YEAR	SHEET NO.	TOTAL SHEETS
ALASKA	311032/Z536100000	2018	N 2.0	TtlShts

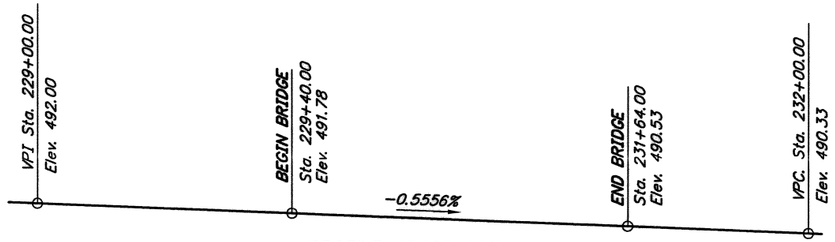

PROFILE GRADE DATA
No Scale

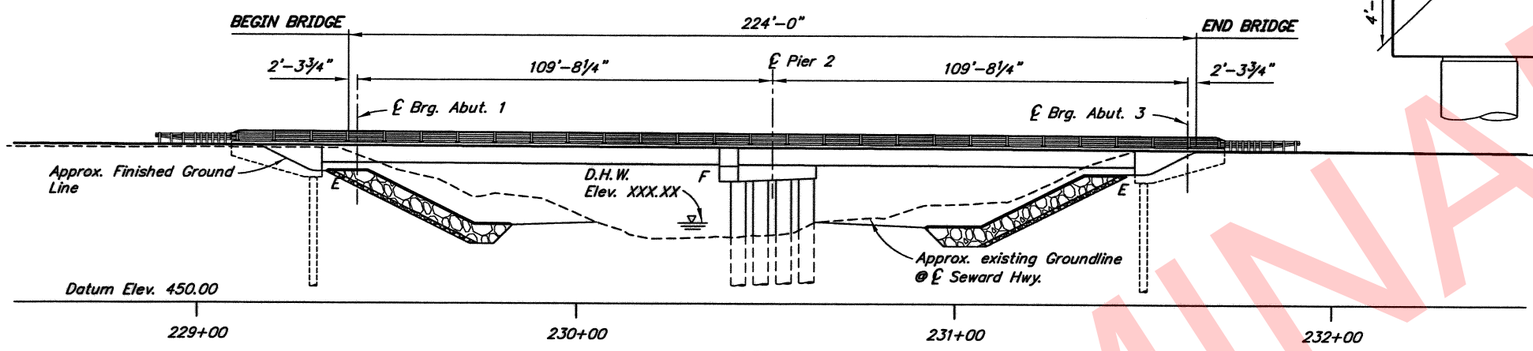

ELEVATION
10 0 20 40
Feet

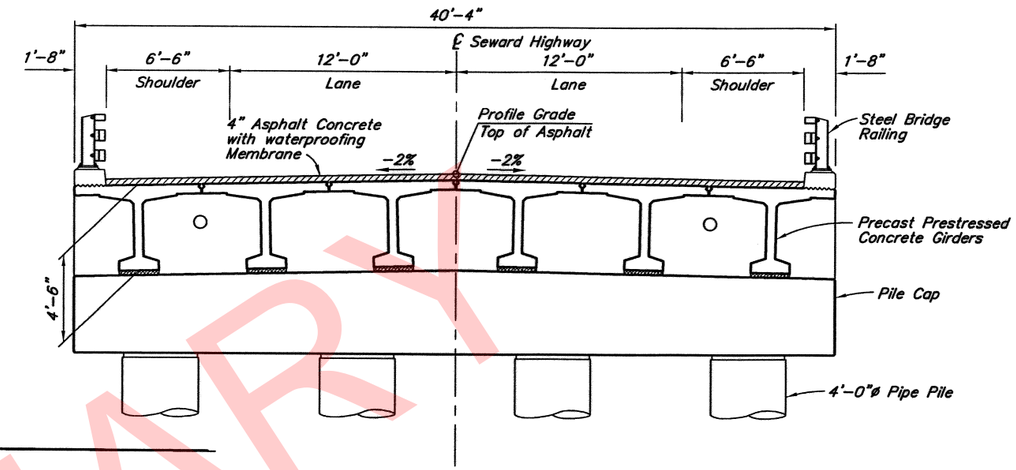

TYPICAL SECTION
12 0 4 8
In. Feet

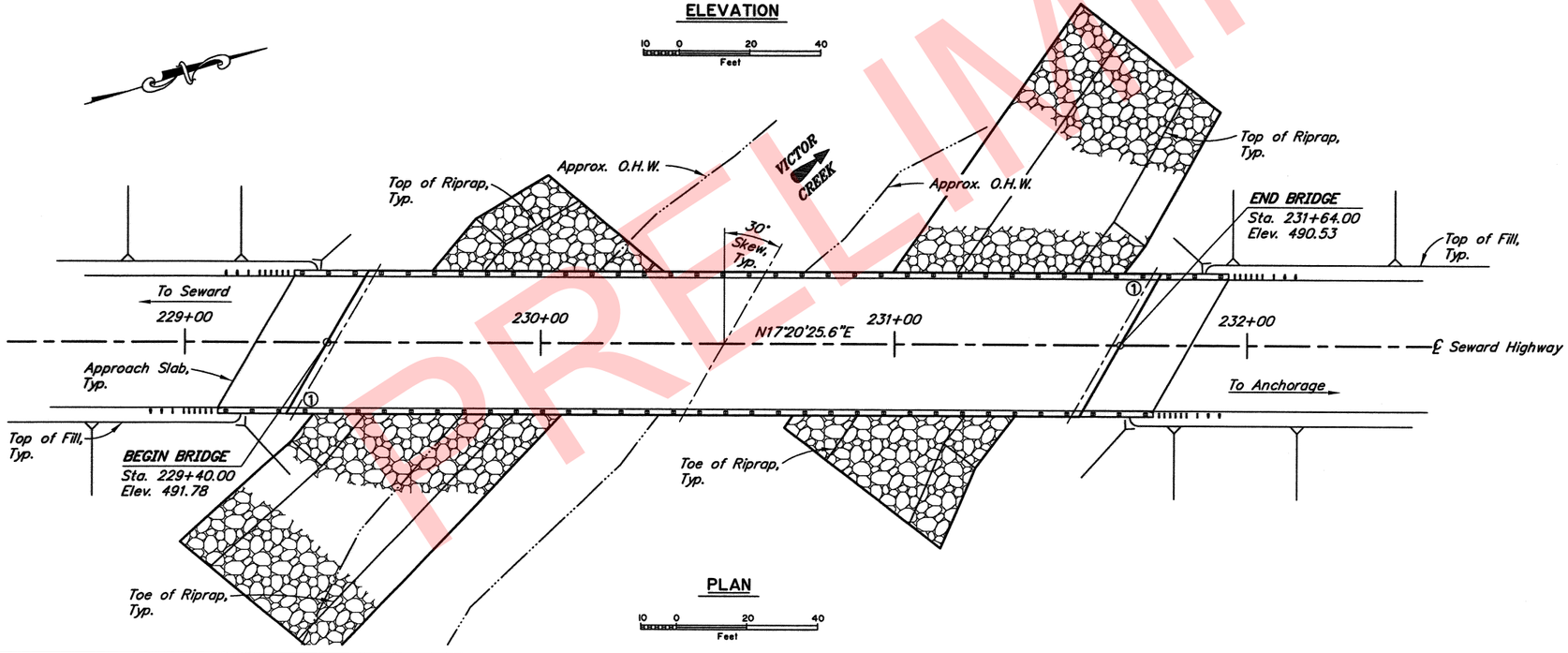

PLAN
10 0 20 40
Feet

PRELIMINARY PLAN

BRIDGE DRAWING INDEX

TITLE	DWG. NO.
GENERAL LAYOUT	1
SITE PLAN	2
RIPRAP LAYOUT	3
RIPRAP SECTIONS	4
ABUTMENT 1	5
ABUTMENT 3	6
ABUTMENT DETAILS	7
WINGWALLS	8
PIER 2	9
PIER 2 DETAILS	10
FRAMING PLAN AND TYPICAL SECTION	11
GIRDERS	12
GIRDER DETAILS	13
APPROACH SLABS	14
STEEL BRIDGE RAILING	15
TRANSITION RAIL	16
TEST HOLE LOGS AND LOCATIONS	17-xx

① Approximate location of Bridge Number Plate.

PRELIMINARY

DESIGNED BY: Elmer Marx	CHECKED: Checker	LAYOUT BY: Elmer Marx	CHECKED BY: Checker
DRAWN BY: Sam Sollie	CHECKED: Elmer Marx	SPECIFICATIONS BY: Elmer Marx	P S & E COMPARED: Checker
QUANTITIES BY: Elmer Marx	CHECKED: Checker	APPROVAL RECOMMENDED BY: Rich Pratt	

STATE OF ALASKA
DEPARTMENT OF TRANSPORTATION AND PUBLIC FACILITIES
BRIDGE SECTION
3132 Channel Drive
Juneau, Alaska 99801
907-465-2975

VICTOR CREEK BRIDGE
SEWARD HIGHWAY
GENERAL LAYOUT

BRIDGE NO. 607
DWG. NO. 1

R:\cad\603,605,607\607-GEN Tue, Feb/27/18 02:54pm

STATE	PROJECT DESIGNATION	YEAR	SHEET NO.	TOTAL SHEETS
ALASKA	311032/Z536100000	2018	N27	

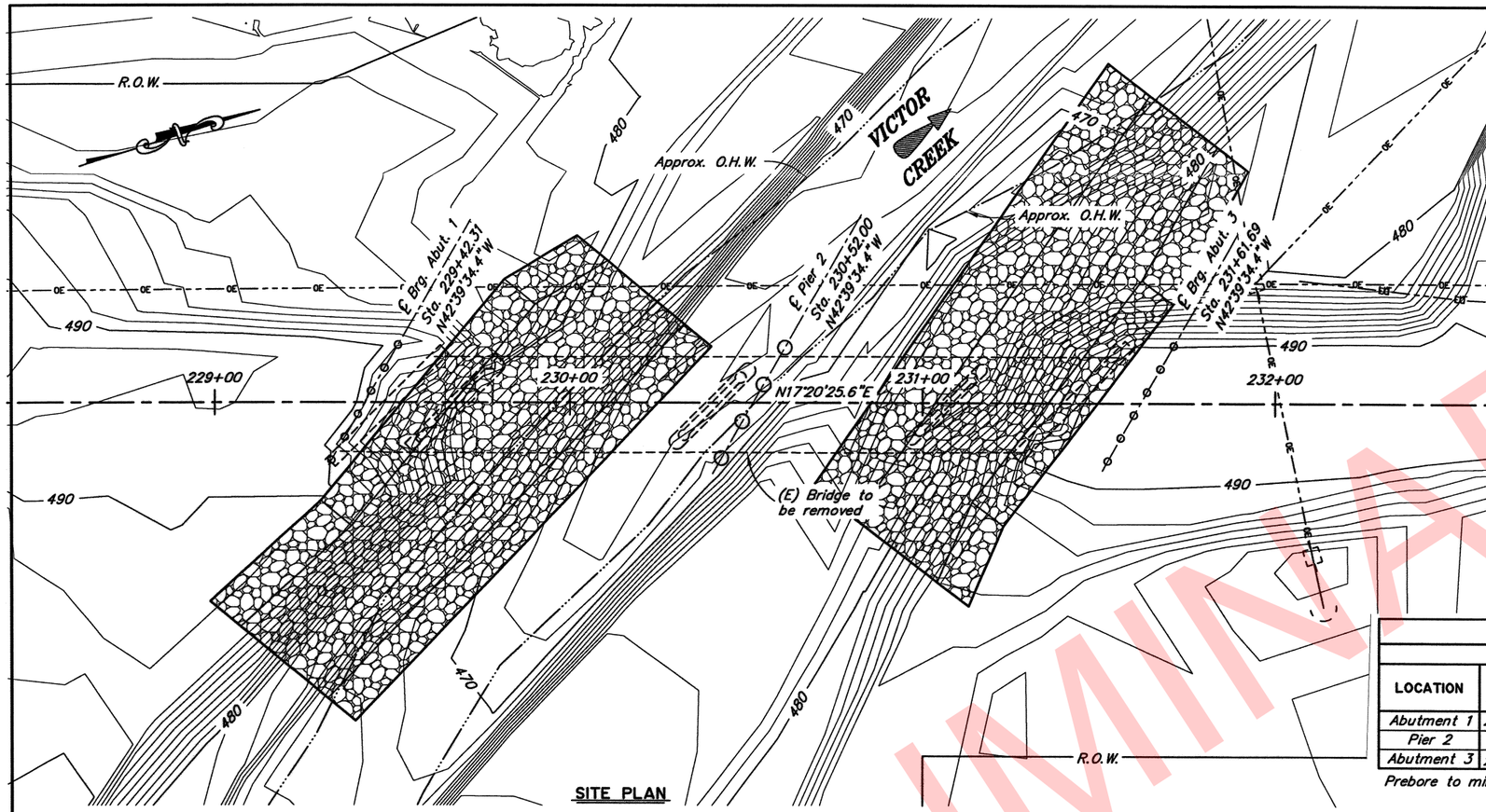

SITE PLAN

10 0 20 40
Feet

GENERAL NOTES

DESIGN:..... AASHTO LRFD Bridge Design Specifications, 2017 Edition, with latest interim specifications.

Seismic design per AASHTO Guide Specifications for LRFD Seismic Bridge Design, 2011 with latest interim revisions.

LIVE LOAD:..... HL-93

DEAD LOAD:..... Includes 50 psf for all wearing surfaces.

SEISMIC PARAMETERS:..... PGA = 0.52
S_s = 1.20
S_1 = 0.50
Site Class = D
Liquefaction Potential = Low
AASHTO 7% probability of exceedance in 75 years.

REINFORCEMENT:..... ASTM A706, Grade 60, Fy = 60,000 psi
ASTM A970 Headed bars, Class HA.
Space reinforcement evenly unless otherwise noted.

PRESTRESSED CONCRETE:..... See "GIRDERS" Dwg.

CONCRETE:..... Class A Concrete unless otherwise noted, f'c = 4000 psi

STRUCTURAL STEEL:..... ASTM A709, Grade 36T3, Fy = 36,000 psi
Galvanize structural steel in accordance with AASHTO M111 unless shown otherwise.

STRUCTURAL STEEL PILING:..... Pipe Piles – API 5L X52 PSL2, Fy = 52,000 psi.
or ASTM A709, GR50T3, Fy = 50,000 psi.
Closed End Pile Tip reinforcing is required.

PILE DATA TABLE

LOCATION	PILE TYPE	DRIVING CRITERIA: MINIMUM PENETRATION (ft)	DRIVING CRITERIA: ESTIMATED PILE TIP ELEVATION (ft)	DRIVING CRITERIA: DRIVING RESISTANCE (K)	DESIGN DATA: STRENGTH I FACTORED LOAD (K)	DESIGN DATA: NOMINAL RESISTANCE (K)	DESIGN DATA: RESISTANCE FACTOR, φ
Abutment 1	2'-0"øx1/2" Pipe	45	388	535	350	535	0.65
Pier 2	4'-0"øx1" Pipe	100	320	1445	920	1415	0.65
Abutment 3	2'-0"øx1/2" Pipe	45	388	535	350	535	0.65

Prebore to minimum penetration for all piles.

ESTIMATE OF QUANTITIES

ITEM NO.	ITEM	PAY UNIT	ESTIMATING UNIT	SUBST.	SUPERST.	TOTAL QUANTITY
202(23)	Removal of Existing Bridge No. 607	LS	LS	All Req'd	All Req'd	All Req'd
203(3)	Unclassified Excavation	CY	CY	1,950	---	1,950
205(6)	Structural Fill	CY	CY	1,112	---	1,112
501(1)	Class A Concrete	LS	CY	308.4	162.0	470.4
501(5)	Precast Concrete Member (110'-0" Decked Bulb-Tee)	EA	EA	---	12	12
503(1)	Reinforcing Steel	LS	LBS	62,310	---	62,310
503(2)	Epoxy-Coated Reinforcing Steel	LS	LBS	---	22,885	22,885
505(5A)	Furnish Structural Steel Piles (2'-0" dia. Pipe Piles)	LF	LF	1,121	---	1,121
505(5B)	Furnish Structural Steel Piles (4'-0" dia. Pipe Piles)	LF	LF	640	---	640
505(6A)	Drive Structural Steel Piles (2'-0" dia. Pipe Piles)	EA	EA	12	---	12
505(6B)	Drive Structural Steel Piles (4'-0" dia. Pipe Piles)	EA	EA	4	---	4
507(1)	Steel Bridge Railing	LF	LF	---	528.0	528.0
508(1)	Waterproofing Membrane (Spray-on)	LS	SF	---	9,768	9,768
520(1)	Temporary Crossings	LS	LS	All Req'd	All Req'd	All Req'd
606(16)	Transition Rail	EA	EA	---	4	4
611(1)-3	Riprap, Class III	CY	CY	2,140	---	2,140
611(1)-1	Riprap, Class I	CY	CY	470	---	470

Item numbers are for reference only. Quantities shown are not necessarily the pay quantities nor the total quantity of the particular item.

PRELIMINARY PLAN

ABBREVIATIONS:

℄	= centerline	ksf	= 1000 pounds per square foot
⅊	= plate	LB	= pound
&	= and	LF	= linear foot
@	= at	LS	= lump sum
ø	= diameter	Lt.	= left
±	= approximate	max.	= maximum
Abut.	= abutment	min.	= minimum
Approx.	= approximate	n.f.	= near face
b.f.	= back/dirt face	No.	= number
bot.	= bottom	o.c.	= on center
Br.	= bridge	—DH—	= overhead electrical line
btwn.	= between	—UT—	= overhead telephone line
Brg.	= Bearing	O.H.W.	= ordinary high water
C.I.P.	= cast in place	psf	= pounds per square foot
CJP	= complete joint penetration	psi	= pounds per square inch
Clr.	= clear, clearance	Req'd	= required
CY	= cubic yard	Rd.	= road
dia.	= diameter	R.O.W.	= right of way
Dwg.	= drawing	Rt.	= right
E	= expansion	SF	= square feet
(E)	= existing	spc.	= space, spaces
EA	= each	Sta.	= station
Elev.	= elevation	SY	= square yard
e.f.	= each face	Symm.	= symmetric
e.w.	= each way	Typ.	= typical
F	= fixed	UT	= ultrasonic testing
f.f.	= front/air face	VPC	= point of vertical curve
ft.	= feet	VPI	= point of vertical intersection
Hwy.	= highway	VPT	= point of vertical tangent
k	= 1,000 pounds	w/	= with

DESIGNED BY: Elmer Marx	CHECKED: Checker	FOUNDATIONS REVIEWED BY: Dave Hamstreet	STATE OF ALASKA DEPARTMENT OF TRANSPORTATION AND PUBLIC FACILITIES BRIDGE SECTION 3132 Channel Drive Juneau, Alaska 99801 907-465-2975
DRAWN BY: Sam Sollie	CHECKED: Elmer Marx		
QUANTITIES BY: Elmer Marx	CHECKED: Checker		

VICTOR CREEK BRIDGE
SEWARD HIGHWAY
SITE PLAN

BRIDGE NO. 607
DWG. NO. 2

R:\cad\603,605,607\607-SITE PLAN Tue, Feb/27/18 02:54pm

PRELIMINARY

STATE	PROJECT DESIGNATION	YEAR	SHEET NO.	TOTAL SHEETS
ALASKA	311032/Z536100000	2018	N28	

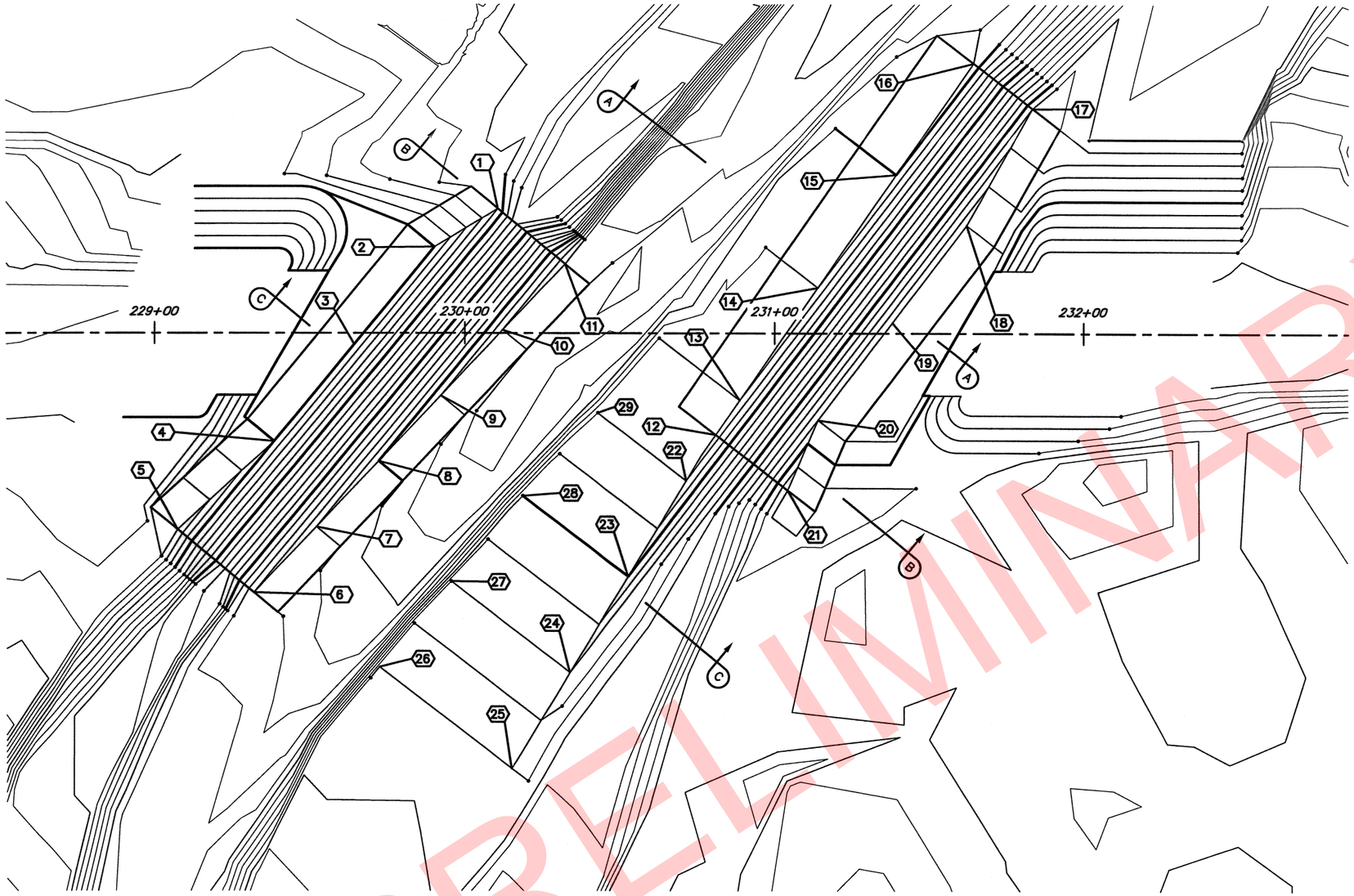

RIPRAP LAYOUT

10 0 20 40
Feet

PRELIMINARY

RIPRAP TABLE

POINT	STATION	OFFSET		ELEVATION
1	230+10.7	40.1'	Left	481.0'
2	229+90.2	27.7'	Left	485.0'
3	229+64.4	3.6'	Right	485.0'
4	229+38.6	34.8'	Right	485.0'
5	229+07.3	63.3'	Right	488.0'
6	229+32.0	83.7'	Right	472.0'
7	229+52.1	62.5'	Right	471.0'
8	229+72.1	41.3'	Right	470.0'
9	229+92.2	20.1'	Right	469.0'
10	230+12.3	1.1'	Left	468.0'
11	230+32.3	22.3'	Left	467.0'
12	230+80.9	32.7'	Right	472.3'
13	230+88.7	21.6'	Right	472.0'
14	231+14.0	14.7'	Left	471.0'
15	231+39.2	51.0'	Left	470.0'
16	231+64.3	87.0'	Left	469.0'
17	231+83.4	72.4'	Left	481.0'
18	231+62.1	34.7'	Left	484.0'
19	231+38.0	3.4'	Left	484.0'
20	231+14.0	27.9'	Right	484.0'
21	231+04.2	50.6'	Right	487.0'

CHANNEL GRADING TABLE

POINT	STATION	OFFSET		ELEVATION
22	230+71.3	47.5'	Right	473.0'
23	230+52.6	78.5'	Right	475.0'
24	230+33.9	109.5'	Right	477.0'
25	230+15.2	140.5'	Right	479.0'
26	229+72.4	107.7'	Right	479.0'
27	229+95.5	80.1'	Right	477.0'
28	230+18.6	52.4'	Right	473.0'
29	230+42.8	25.6'	Right	471.0'

NOTE:
Channel excavation to be included in Pay Item Unclassified Excavation.

DESIGNED BY: Michael Knapp	CHECKED:	STATE OF ALASKA DEPARTMENT OF TRANSPORTATION AND PUBLIC FACILITIES BRIDGE SECTION 3132 Channel Drive Juneau, Alaska 99801 907-465-2975	VICTOR CREEK BRIDGE SEWEARD HIGHWAY RIPRAP LAYOUT
DRAWN BY: Sam Salle	CHECKED: Michael Knapp		BRIDGE NO. 607
QUANTITIES BY: Michael Knapp	CHECKED:		DWG. NO. 3

R:\cad\603.605.607\607-RIPRAP LAYOUT Tue, Feb/27/18 02:54pm

STATE	PROJECT DESIGNATION	YEAR	SHEET NO.	TOTAL SHEETS
ALASKA	311032/Z536100000	2018	N29	

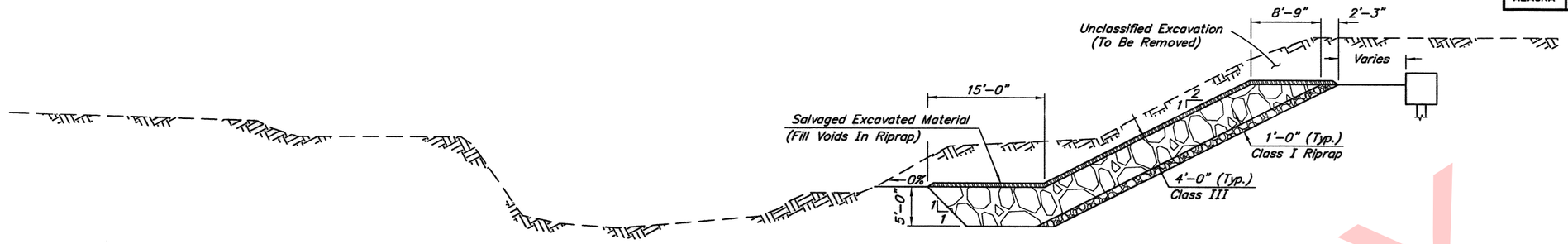

RIPRAP SECTION A-A

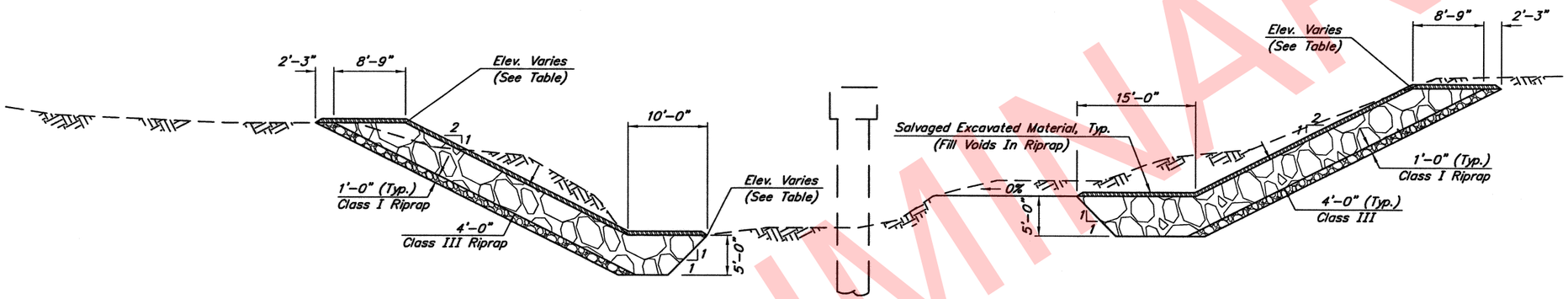

RIPRAP SECTION B-B

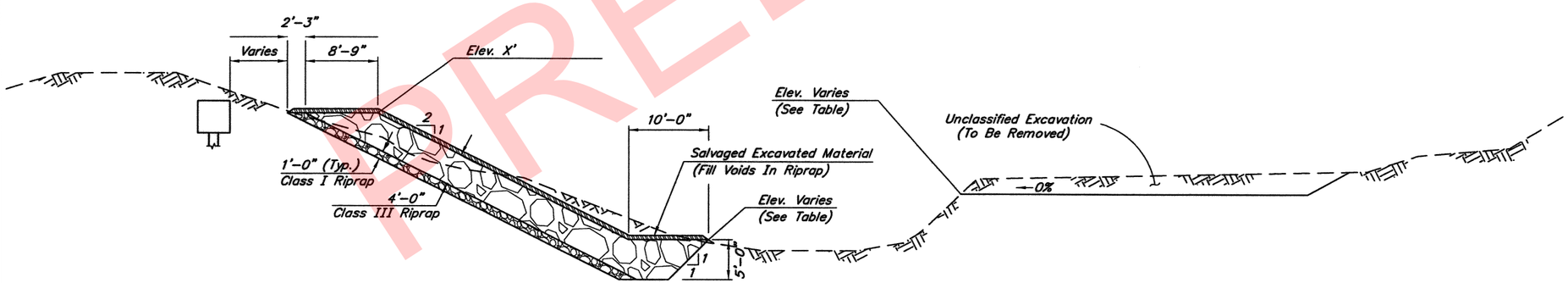

RIPRAP SECTION C-C

PRELIMINARY

R:\cad\603,605,607\607-RIPRAP SECTIONS Tue, Feb/27/18 02:54pm

DESIGNED BY: Michael Knapp	CHECKED:	STATE OF ALASKA DEPARTMENT OF TRANSPORTATION AND PUBLIC FACILITIES BRIDGE SECTION 3132 Channel Drive Juneau, Alaska 99801 907-465-2975	VICTOR CREEK BRIDGE SEWEARD HIGHWAY RIPRAP SECTIONS	BRIDGE NO. 607
DRAWN BY: Sam Sollie	CHECKED: Michael Knapp			DWG. NO. 4
QUANTITIES BY: Michael Knapp	CHECKED:			

STATE	PROJECT DESIGNATION	YEAR	SHEET NO.	TOTAL SHEETS
ALASKA	311032/Z536100000	2018	N30	

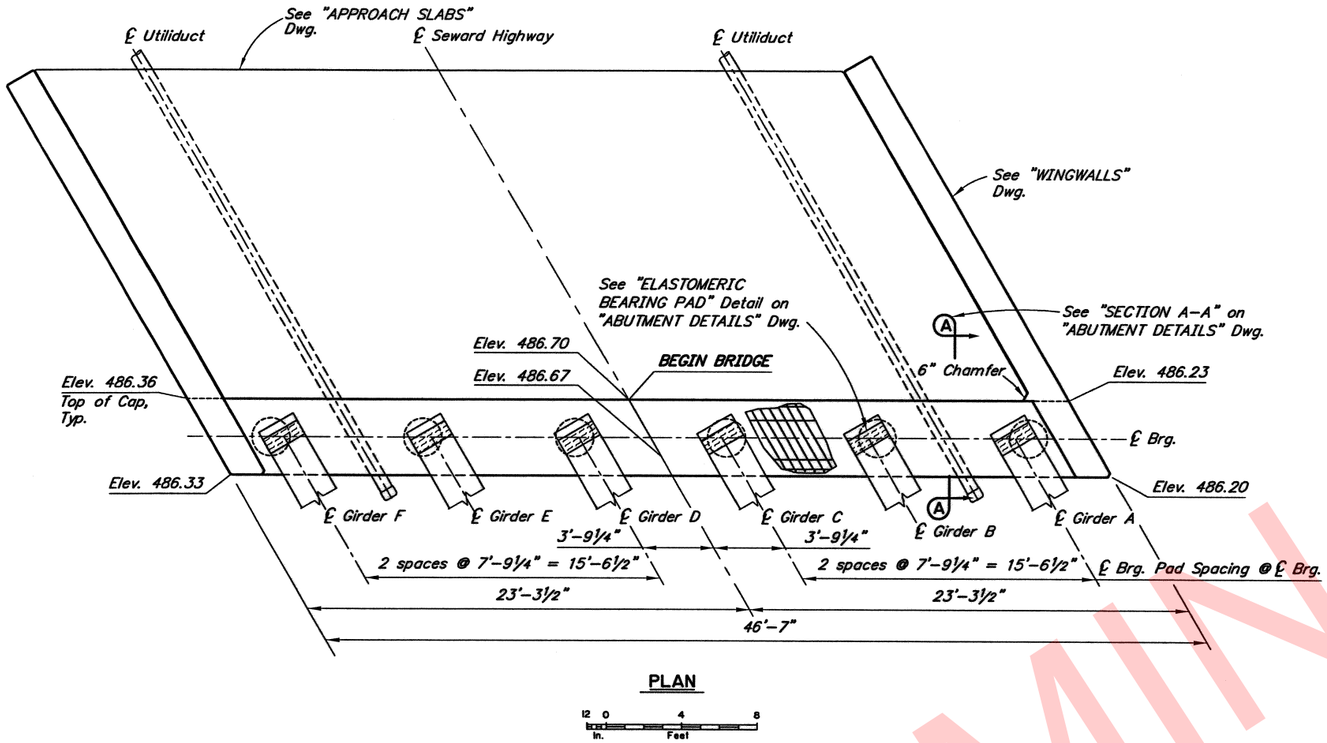

PLAN

12 0 4 8
In. Feet

REINFORCING STEEL - ONE ABUTMENT

MARK	NOTE	SIZE	NO.	LENGTH	TYPE	BENDING DIAGRAM
A401	S	4	6	266'–9"	SPIRAL	
A402		4	144	VARIES	STIRRUP	
A403		4	42	6'–0"	HOOP	
A404		4	60	5'–2"	TIE	
A501	E	5	44	17'–3"	STIRRUP	
A601		6	60	40'–0"	---	
A602	M,S	6	10	46'–2"	---	
A603	E,S	6	7	42'–2"	---	
A604	E	6	5	4'–10"	---	
A605	E,S	6	6	46'–2"	---	
A701	E	7	8	3'–0"	BENT	
A1001	H,S	10	14	46'–2"	HEADED	

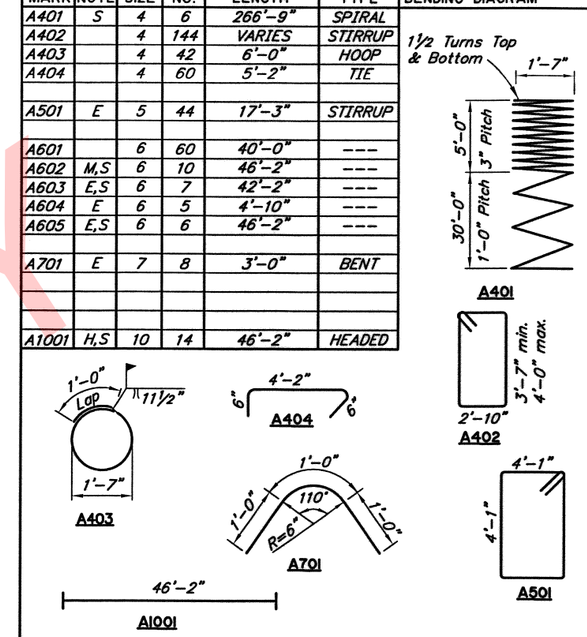

E – Epoxy–Coated
H – Headed reinforcing steel
M – Field adjust to match cross slope
S – Splice permitted. Splice length not included

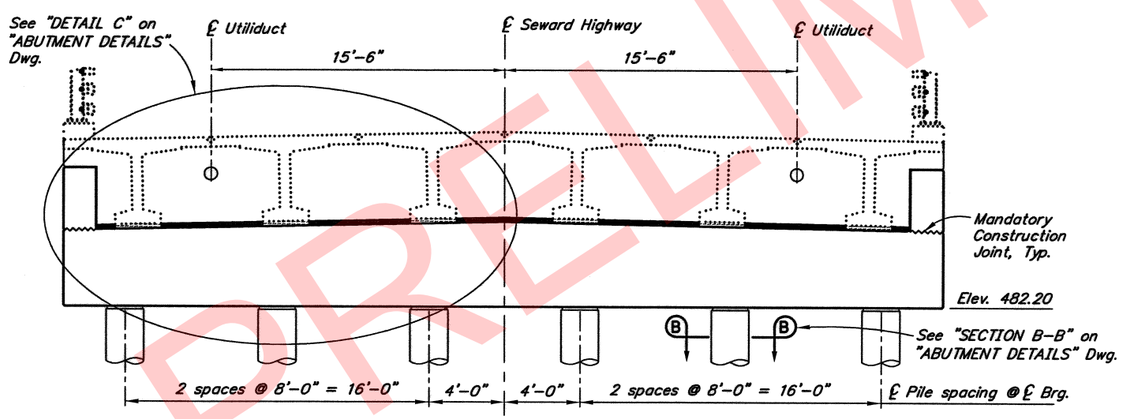

ELEVATION
(Looking Back on Station)

12 0 4 8
In. Feet

PRELIMINARY

DESIGNED BY: Elmer Marx	CHECKED: Checker	PRELIMINARY PLAN	STATE OF ALASKA DEPARTMENT OF TRANSPORTATION AND PUBLIC FACILITIES BRIDGE SECTION 3132 Channel Drive Juneau, Alaska 99801 907–465–2975
DRAWN BY: Sam Sollie	CHECKED: Elmer Marx		
QUANTITIES BY: Elmer Marx	CHECKED: Checker		

VICTOR CREEK BRIDGE
SEWARD HIGHWAY
ABUTMENT 1

BRIDGE NO. 607
DWG. NO. 5

R:\cad\603,605,607\607–1–ABUT 1 Tue, Feb/27/18 02:53pm

STATE	PROJECT DESIGNATION	YEAR	SHEET NO.	TOTAL SHEETS
ALASKA	311032/Z536100000	2018	N31	

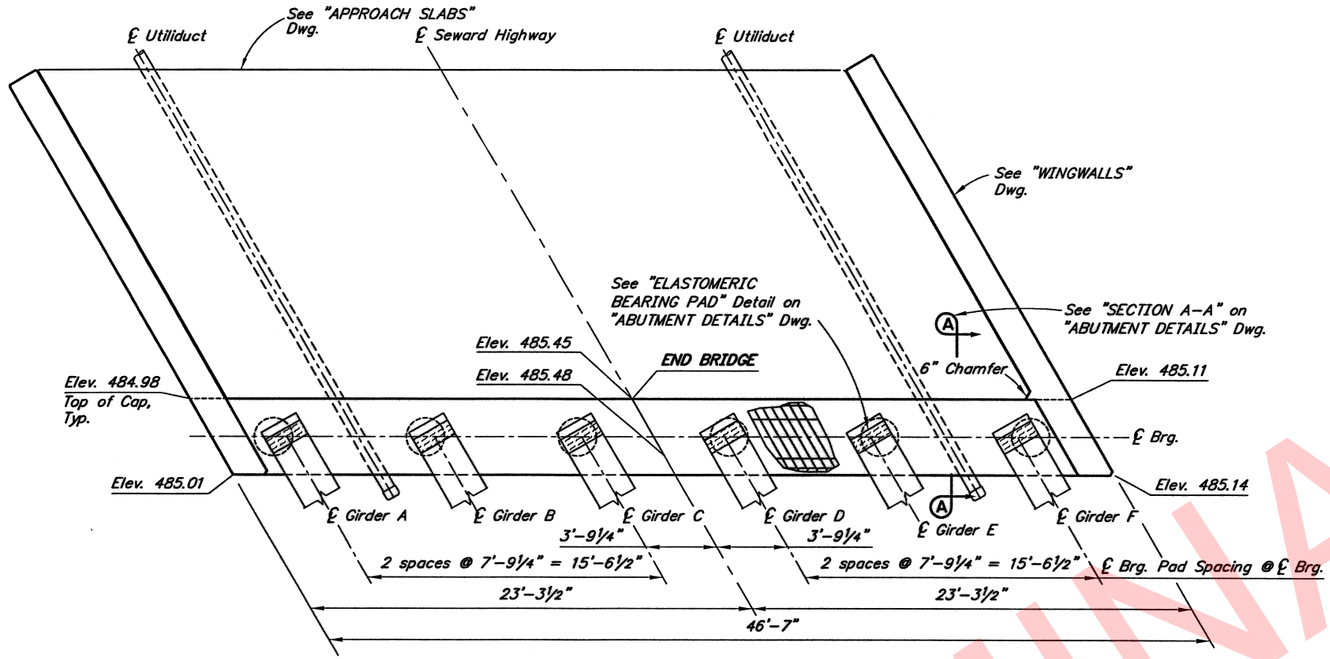

PLAN

12 0 4 8
In. Feet

REINFORCING STEEL - ONE ABUTMENT

MARK	NOTE	SIZE	NO.	LENGTH	TYPE	BENDING DIAGRAM
A401	S	4	6	266'–9"	SPIRAL	
A402		4	144	VARIES	STIRRUP	
A403		4	42	6'–0"	HOOP	
A404		4	60	5'–2"	TIE	
A501	E	5	44	17'–3"	STIRRUP	
A601		6	60	40'–0"	---	
A602	M,S	6	10	46'–2"	---	
A603	E,S	6	7	42'–2"	---	
A604	E	6	5	4'–10"	---	
A605	E,S	6	6	46'–2"	---	
A701	E	7	8	3'–0"	BENT	
A1001	H,S	10	14	46'–2"	HEADED	

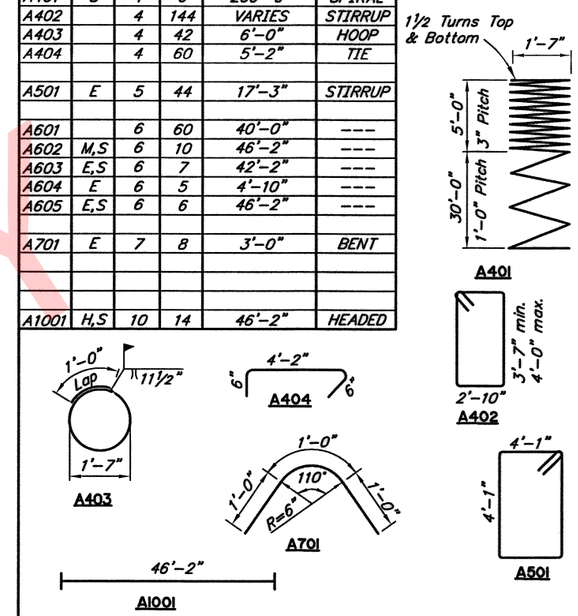

E – Epoxy–Coated
H – Headed reinforcing steel
M – Field adjust to match cross slope
S – Splice permitted. Splice length not included

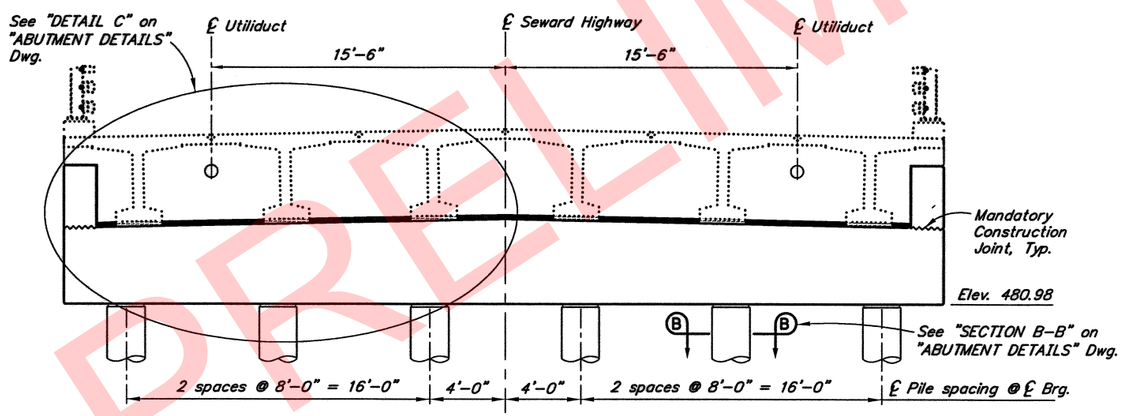

ELEVATION

12 0 4 8
In. Feet

PRELIMINARY

DESIGNED BY: Elmer Marx	CHECKED: Checker	PRELIMINARY PLAN	STATE OF ALASKA DEPARTMENT OF TRANSPORTATION AND PUBLIC FACILITIES BRIDGE SECTION 3132 Channel Drive Juneau, Alaska 99801 907–465–2975
DRAWN BY: Sam Sollie	CHECKED: Elmer Marx		
QUANTITIES BY: Elmer Marx	CHECKED: Checker		

VICTOR CREEK BRIDGE
SEWARD HIGHWAY
ABUTMENT 3

BRIDGE NO. 607
DWG. NO. 6

R:\cad\603,605,607\607–1–ABUT 2 Tue, Feb/27/18 02:53pm

STATE	PROJECT DESIGNATION	YEAR	SHEET NO.	TOTAL SHEETS
ALASKA	311032/Z536100000	2018	32	

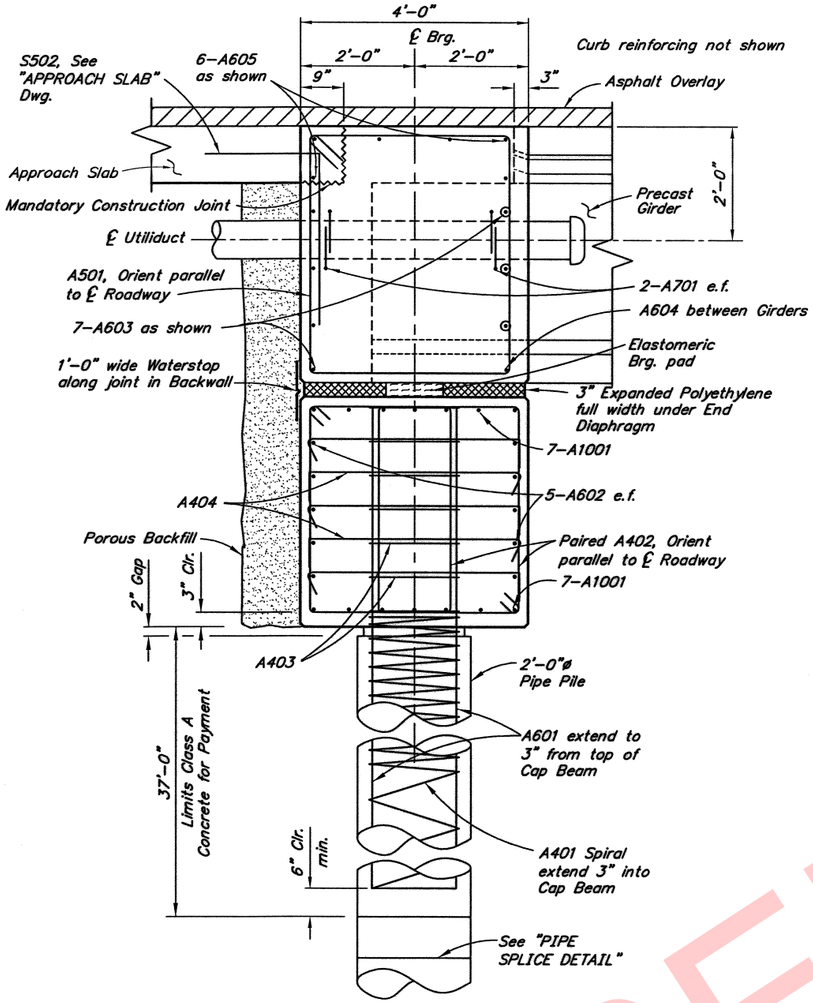

SECTION A-A

12 6 0 1 2 3
In. Feet

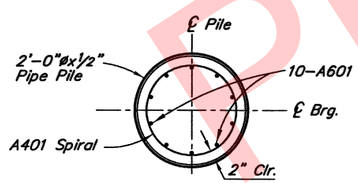

SECTION B-B

12 6 0 1 2 3
In. Feet

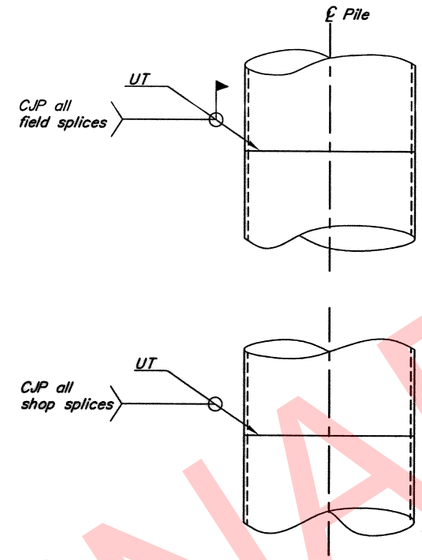

PIPE SPLICE DETAIL

No Scale

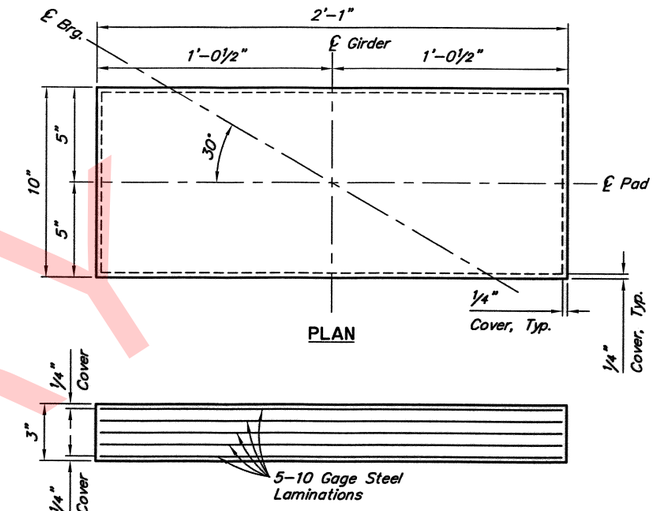

PLAN

ELEVATION

ELASTOMERIC BEARING PAD

Grade 5
Shear Modulus = 0.115 ksi
Dead Load = 99 k
Live Load = 90 k

6 3 0 1
In. Feet

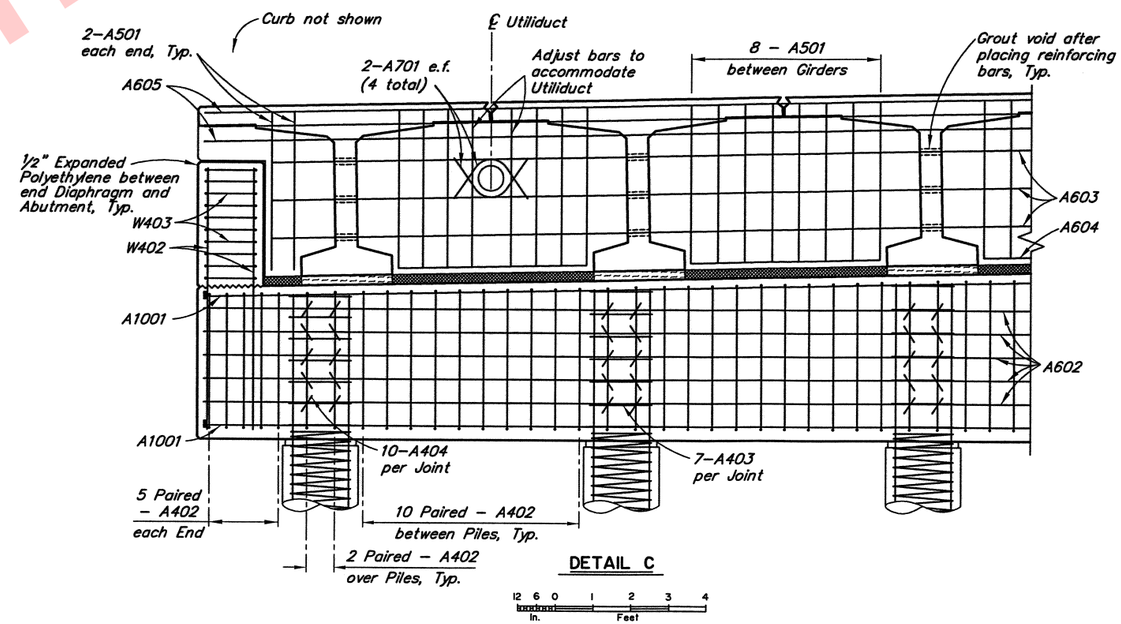

DETAIL C

12 6 0 1 2 3 4
In. Feet

PRELIMINARY

DESIGNED BY: Elmer Marx	CHECKED: Checker	PRELIMINARY PLAN	STATE OF ALASKA DEPARTMENT OF TRANSPORTATION AND PUBLIC FACILITIES BRIDGE SECTION 3132 Channel Drive Juneau, Alaska 99801 907-465-2975
DRAWN BY: Sam Sollie	CHECKED: Elmer Marx		
QUANTITIES BY: Elmer Marx	CHECKED: Checker		

VICTOR CREEK BRIDGE

SEWARD HIGHWAY

ABUTMENT DETAILS

BRIDGE NO. 607

DWG. NO. 7

R:\cad\603,605,607\607-1-ABUT DET Tue, Feb/27/18 02:53pm

STATE	PROJECT DESIGNATION	YEAR	SHEET NO.	TOTAL SHEETS
ALASKA	311032/Z536100000	2018	N33	

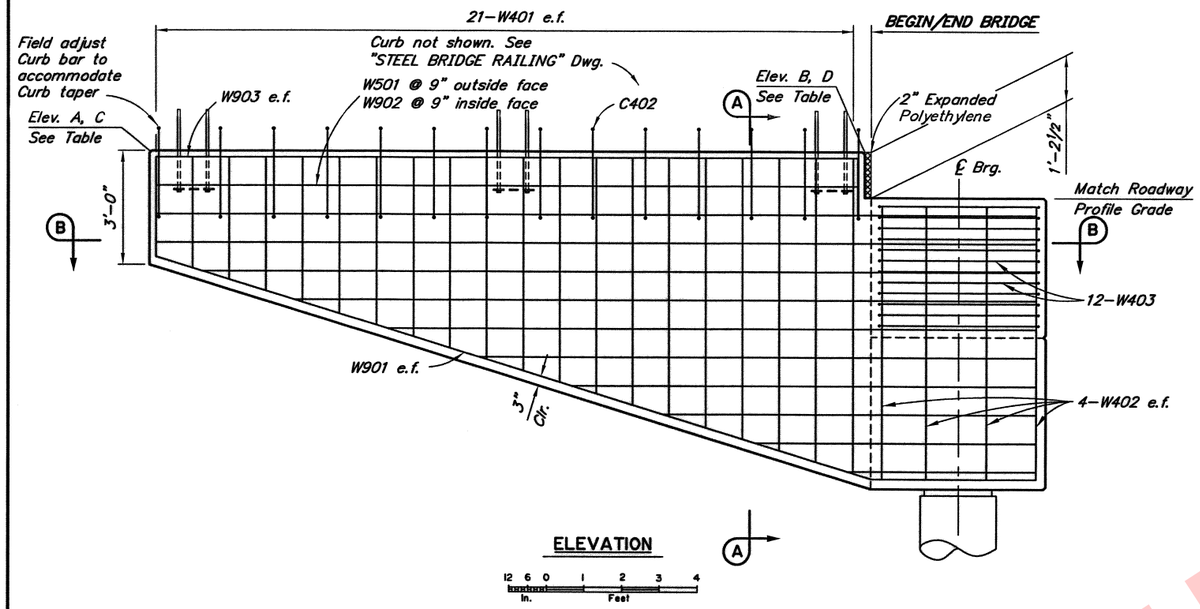

ELEVATION

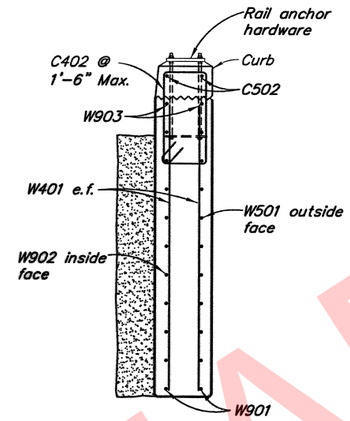

SECTION A-A

REINFORCING STEEL - ONE ABUTMENT

MARK	NOTE	SIZE	NO.	LENGTH	TYPE	BENDING DIAGRAM
W401		4	84	VARIES	---	
W402		4	16	7'-2"	---	
W403		4	24	11'-7"	STIRRUP	
W501		5	22	VARIES	---	
W901		9	4	24'-1"	BENT	
W902		9	22	VARIES	---	
W903		9	4	VARIES	BENT	
C402	E	4	28	7'-11"	STIRRUP	
C502	E	5	4	VARIES	---	

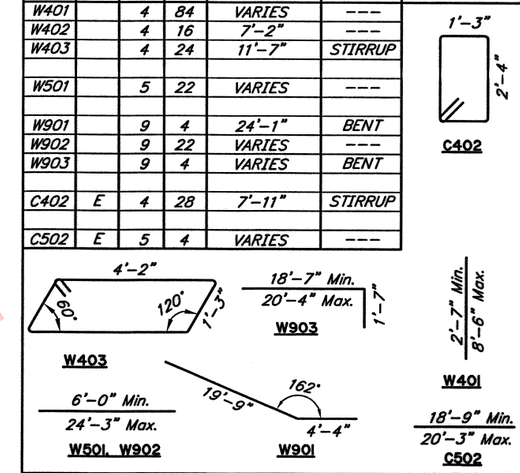

E - Epoxy-Coated

TOP OF WINGWALL ELEVATION TABLE (FT)

LOCATION	A DOWNSTREAM	B DOWNSTREAM	C UPSTREAM	D UPSTREAM
ABUTMENT 1	491.13	491.02	491.25	491.14
ABUTMENT 3	489.66	489.77	489.78	489.89

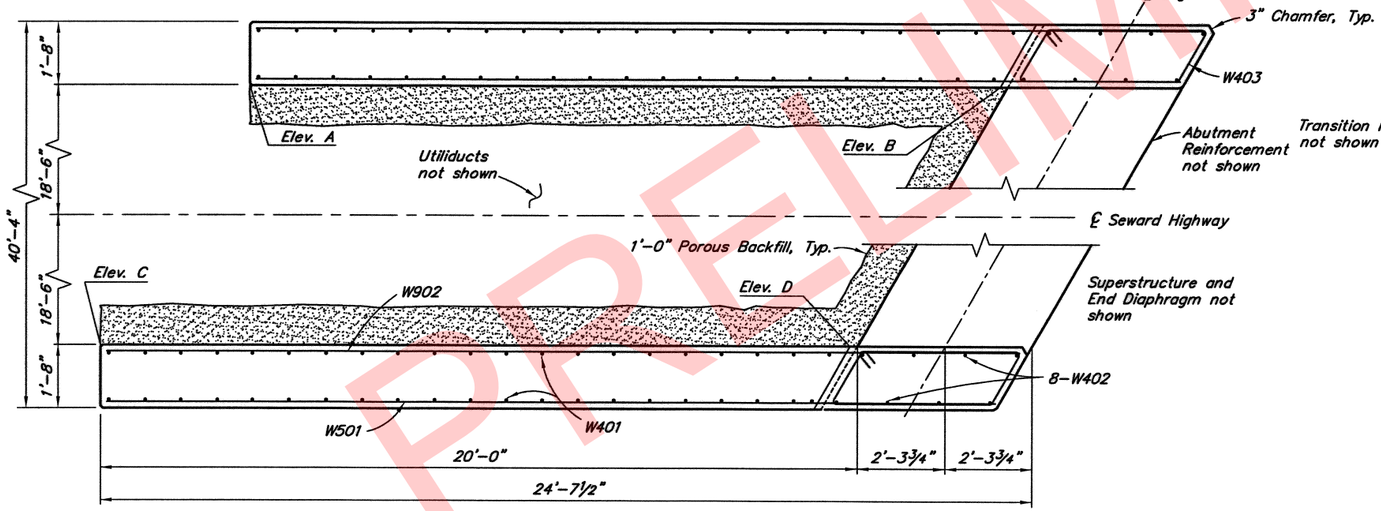

SECTION B-B

(Abutment 1 shown, Abutment 3 similar)

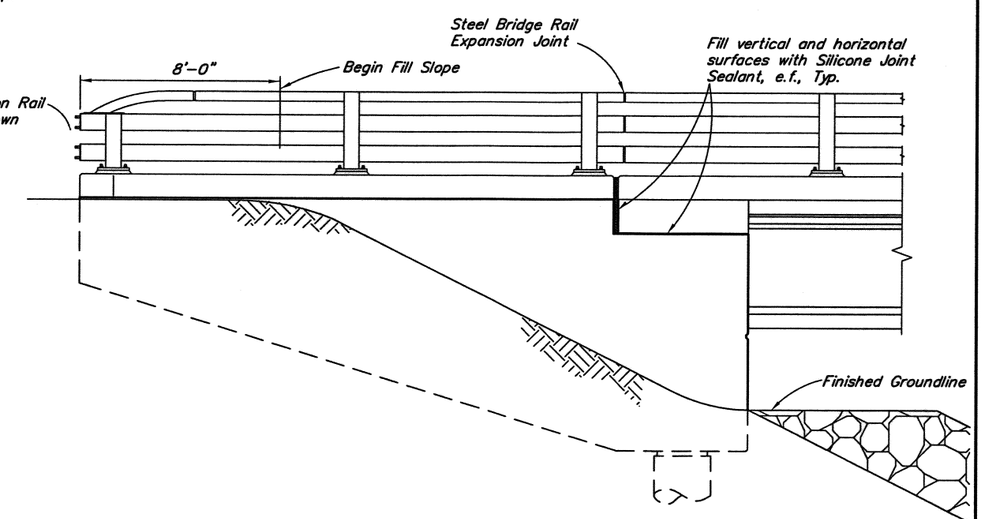

FINISHED ELEVATION

PRELIMINARY

DESIGNED BY: Elmer Marx	CHECKED: Checker	PRELIMINARY PLAN	STATE OF ALASKA DEPARTMENT OF TRANSPORTATION AND PUBLIC FACILITIES BRIDGE SECTION 3132 Channel Drive Juneau, Alaska 99801 907-465-2975
DRAWN BY: Sam Sollie	CHECKED: Elmer Marx		
QUANTITIES BY: Elmer Marx	CHECKED: Checker		

VICTOR CREEK BRIDGE

SEWARD HIGHWAY

WINGWALLS

BRIDGE NO. 607

DWG. NO. 8

R:\cad\603,605,607\607-1-WINGWALLS Tue, Feb/27/18 02:53pm

STATE	PROJECT DESIGNATION	YEAR	SHEET NO.	TOTAL SHEETS
ALASKA	311032/Z536100000	2018	N34	

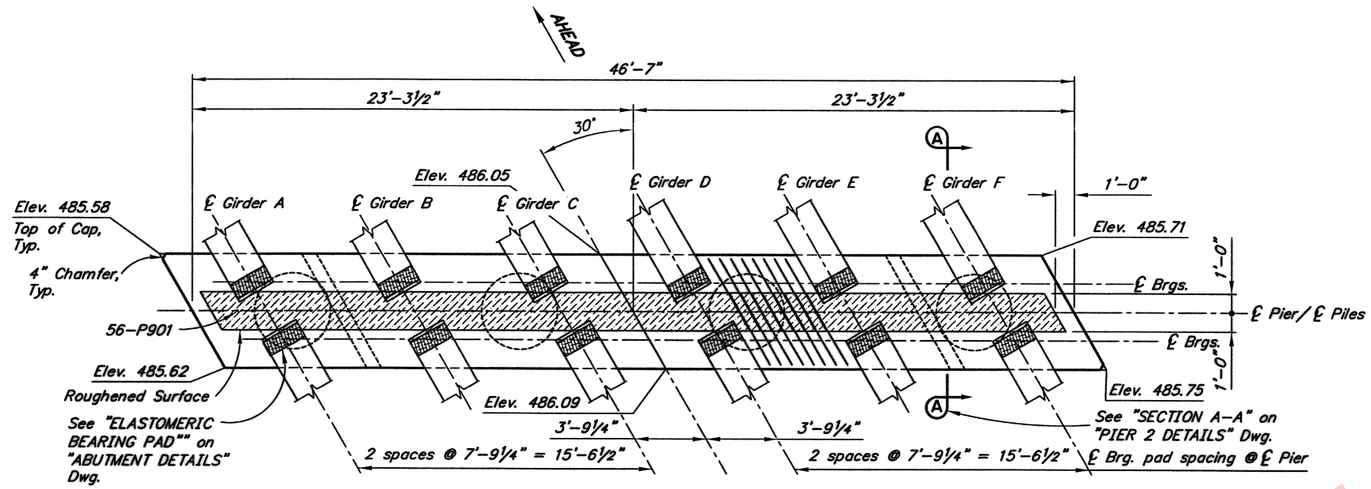

PLAN

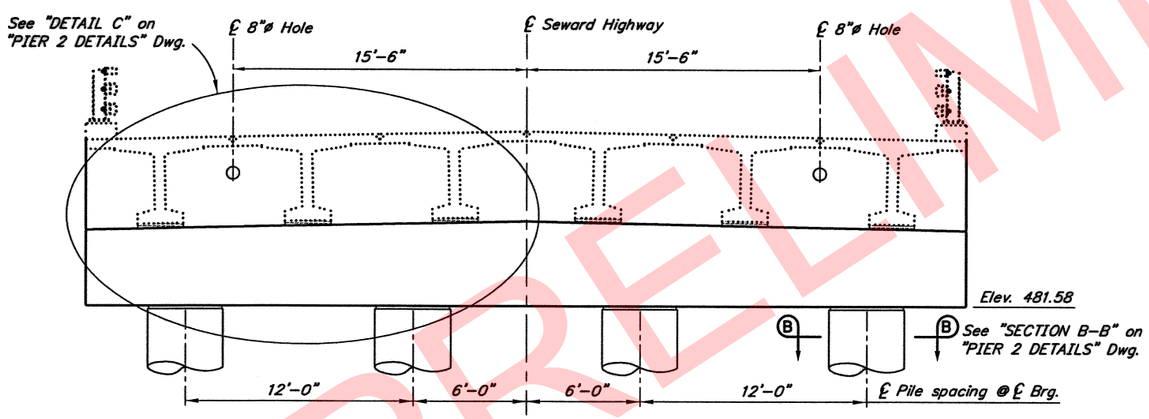

ELEVATION

12 0 4 8
In. Feet

PRELIMINARY

R:\cad\603,605,607\607-1-PIER Tue, Feb/27/18 02:53pm

DESIGNED BY: Elmer Marx	CHECKED: Checker	**PRELIMINARY PLAN**	STATE OF ALASKA DEPARTMENT OF TRANSPORTATION AND PUBLIC FACILITIES BRIDGE SECTION 3132 Channel Drive Juneau, Alaska 99801 907-465-2975
DRAWN BY: Sam Sollie	CHECKED: Elmer Marx		
QUANTITIES BY: Elmer Marx	CHECKED: Checker		

VICTOR CREEK BRIDGE

SEWARD HIGHWAY

PIER 2

BRIDGE NO. 607

DWG. NO. 9

STATE	PROJECT DESIGNATION	YEAR	SHEET NO.	TOTAL SHEETS
ALASKA	311032/Z536100000	2018	N35	

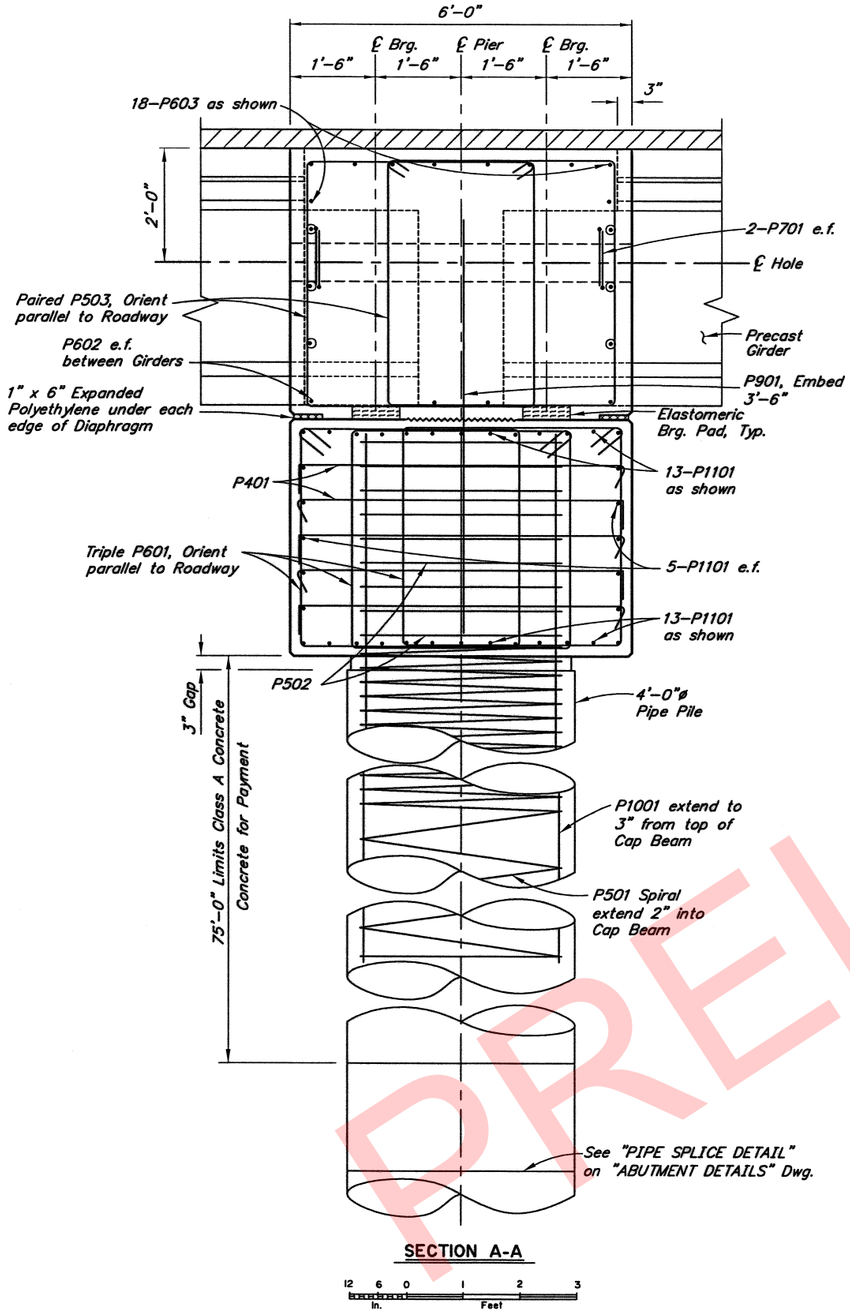

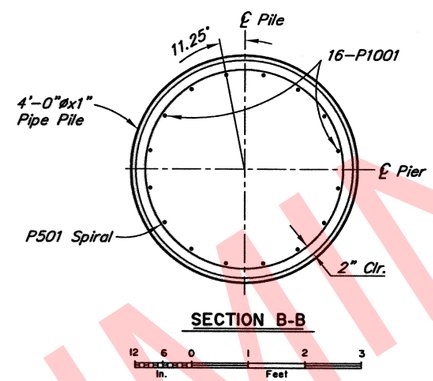

REINFORCING STEEL - ONE PIER

MARK	NOTE	SIZE	NO.	LENGTH	TYPE
P401		4	40	7'-6"	BENT
P501	S	5	4	970'-0"	SPIRAL
P502		5	36	12'-0"	HOOP
P503	E	5	100	17'-1"	STIRRUP
P601		6	210	VARIES	STIRRUP
P602	E	6	10	4'-10"	---
P603	E,M,S	6	18	46'-2"	---
P701	E	7	8	3'-0"	BENT
P901	E	9	56	7'-6"	---
P1001		10	64	60'-0"	---
P1101	H,S	11	36	46'-2"	---

BENDING DIAGRAM

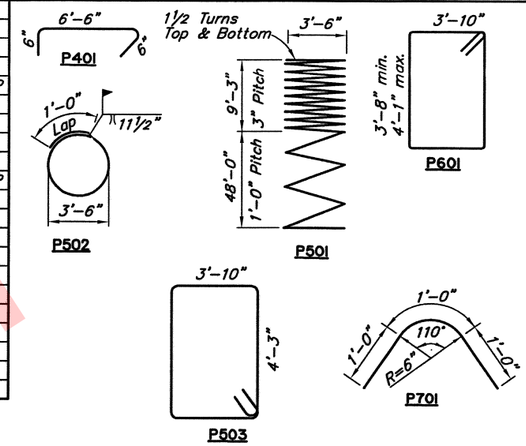

E - Epoxy-Coated
H - Headed reinforcing steel
M - Field adjust to match cross slope
S - Splices permitted. Splice length not included

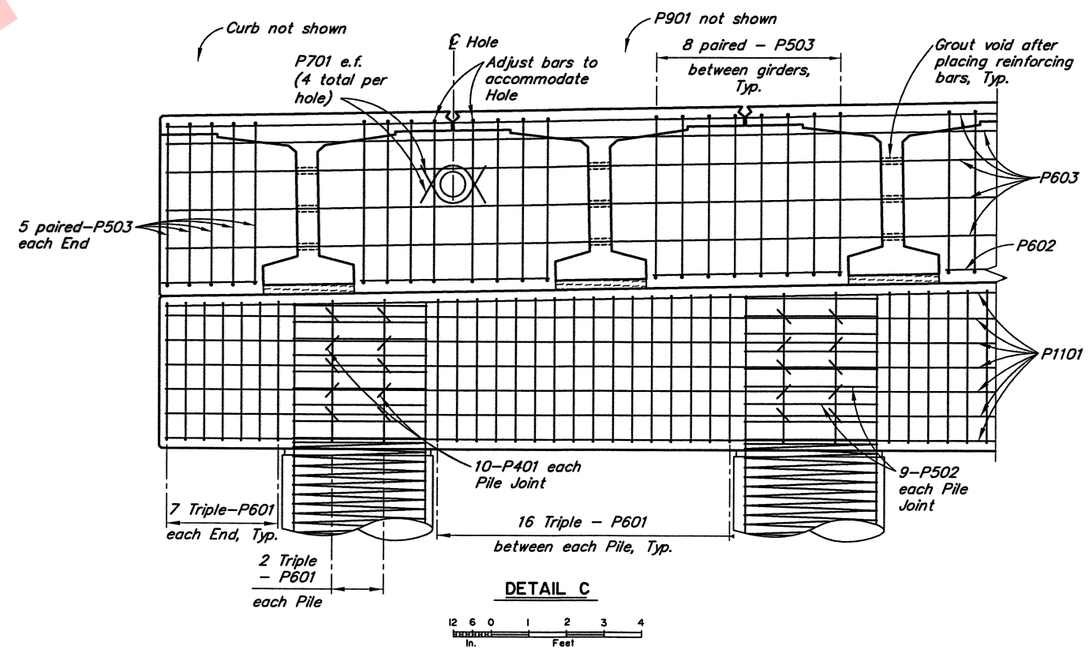

PRELIMINARY

R:\cad\603,605,607\607-1-PIER (2) Tue, Feb/27/18 02:54pm

DESIGNED BY: Elmer Marx	CHECKED: Checker	PRELIMINARY PLAN	STATE OF ALASKA DEPARTMENT OF TRANSPORTATION AND PUBLIC FACILITIES BRIDGE SECTION 3132 Channel Drive Juneau, Alaska 99801 907-465-2975
DRAWN BY: Sam Sollie	CHECKED: Elmer Marx		
QUANTITIES BY: Elmer Marx	CHECKED: Checker		

VICTOR CREEK BRIDGE

SEWARD HIGHWAY

PIER 2 DETAILS

BRIDGE NO. 607

DWG. NO. 10

STATE	PROJECT DESIGNATION	YEAR	SHEET NO.	TOTAL SHEETS
ALASKA	311032/Z536100000	2018	N36	

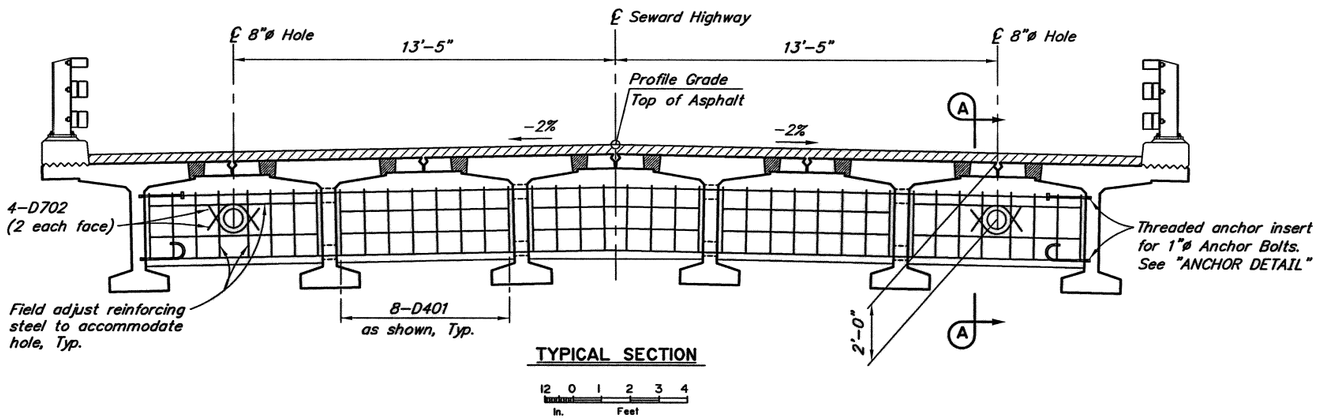

TYPICAL SECTION

12 0 1 2 3 4
In. Feet

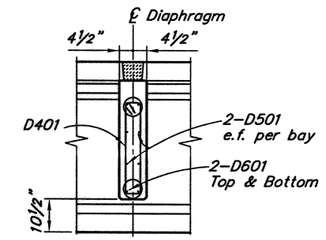

SECTION A-A

12 6 0 1 2 3 4
In. Feet

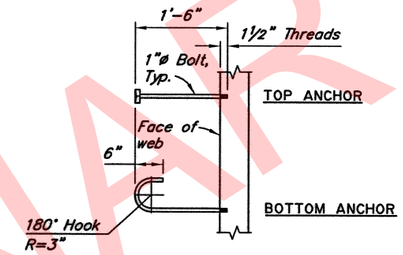

ASTM A307 GALVANIZED

ANCHOR DETAIL

12 6 0 1 2 3
In. Feet

REINFORCING STEEL - ONE DIAPHRAGM

MARK	NOTE	SIZE	NO.	LENGTH	TYPE	BENDING DIAGRAM
D401	E	4	40	6'-1"	STIRRUP	
D501	E	5	20	6'-9"	---	
D601	E,M	6	4	37'-10"	---	
D701	E	7	8	3'-0"	BENT	

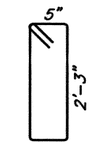

D401

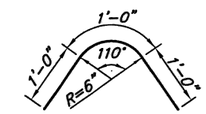

D701

E - Epoxy-Coated
M - Field adjust to match crown

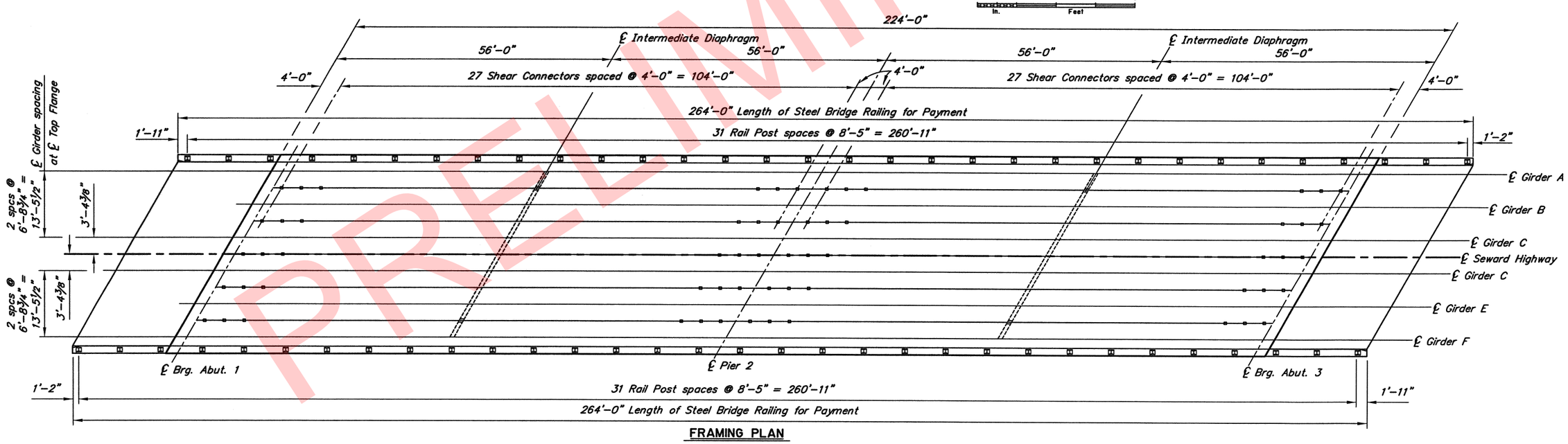

FRAMING PLAN

12 0 5 10 15 20
In. Feet

PRELIMINARY

DESIGNED BY: Elmer Marx	CHECKED: Checker	PRELIMINARY PLAN	STATE OF ALASKA DEPARTMENT OF TRANSPORTATION AND PUBLIC FACILITIES BRIDGE SECTION 3132 Channel Drive Juneau, Alaska 99801 907-465-2975
DRAWN BY: Sam Sollie	CHECKED: Elmer Marx		
QUANTITIES BY: Elmer Marx	CHECKED: Checker		

VICTOR CREEK BRIDGE

SEWARD HIGHWAY

FRAMING PLAN AND TYPICAL SECTION

BRIDGE NO. 607

DWG. NO. 11

R:\cad\603,605,607\607-1-TYPICAL Tue, Feb/27/18 02:54pm

STATE	PROJECT DESIGNATION	YEAR	SHEET NO.	TOTAL SHEETS
ALASKA	311032/Z536100000	2018	N37	

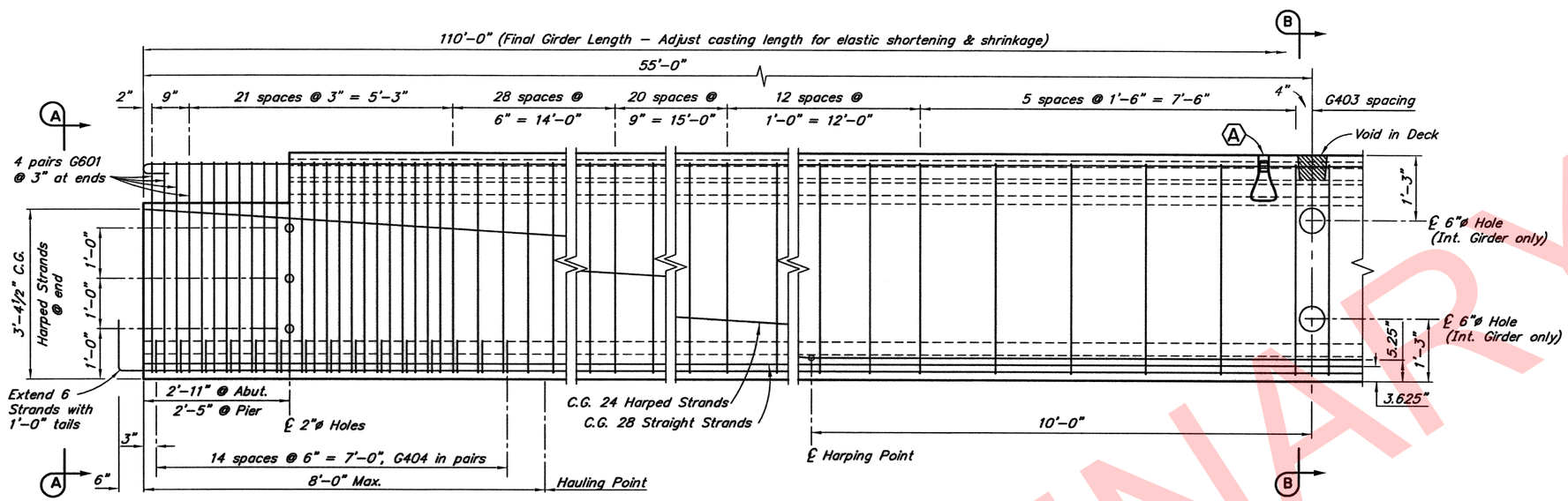

ELEVATION

12 6 0 1 2 3
In. Feet

REINFORCING STEEL - ONE GIRDER

MARK	NOTE	SIZE	NO.	LENGTH	TYPE	BENDING DIAGRAM
G401	E	4	200	VARIES	BENT	
G401X	E,X	4	236	VARIES	BENT	
G402	E,S	4	10	104'-4"	---	
G402X	E,S,X	4	12	104'-4"	---	
G403	E	4	344	5'-8"	BENT	
G404	E	4	60	3'-3"	BENT	
G501	E	5	200	VARIES	---	
G501X	E,X	5	236	VARIES	BENT	
G502	E,S	5	10	111'-2"	BENT	
G502X	E,S	5	12	111'-2"	BENT	
G601	E	6	16	5'-8"	BENT	
C401	E	4	78	4'-11"	BENT	
C501	E,S	5	2	223'-8"	---	

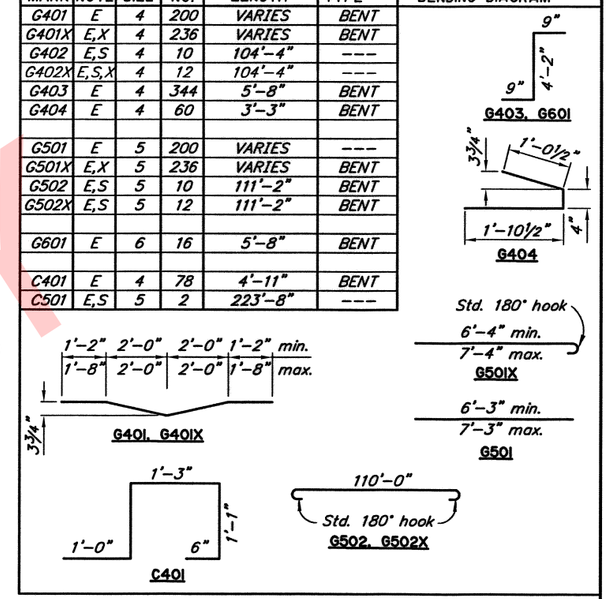

E – Epoxy-Coated reinforcing steel
L – Ship 7 loose per exterior girder
S – Splices permitted. Length does not include splices
X – Exterior girders only

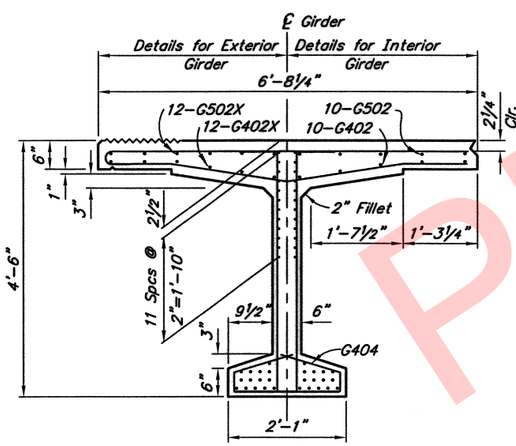

VIEW A-A

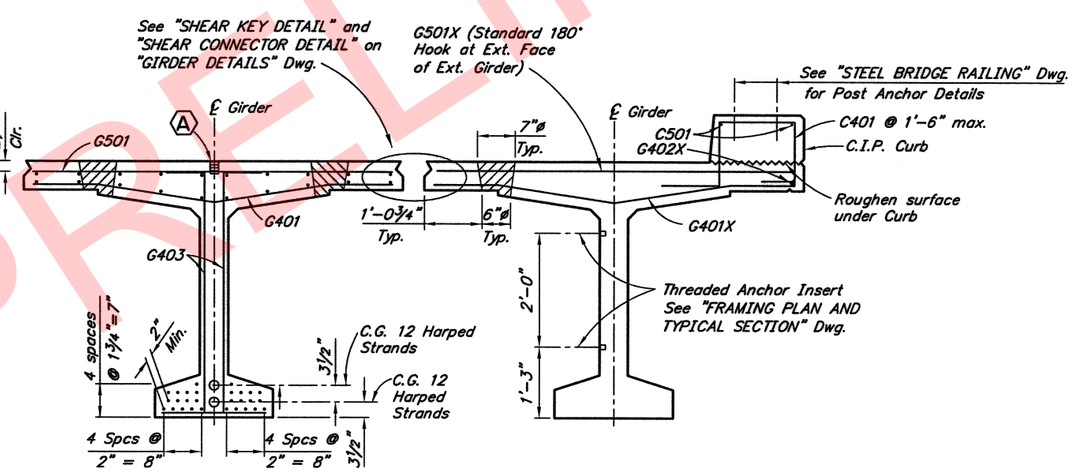

SECTION B-B

EXTERIOR GIRDER NEAR MID SPAN

(Unrelated Reinforcement not shown)

GIRDER NOTES:

Class P Concrete: at Stress Transfer.....f'ci = 6,500 psi
at 28 Days.....f'c = 7,500 psi

½"ø low-relaxation prestressing strands with an ultimate strength of 270 ksi and a cross sectional area of 0.153 in².

Steel stresses: Pretensioning – Jacking Stress 189 ksi
After initial losses 171 ksi
After all losses 141 ksi

One inch clear cover on reinforcing steel unless otherwise noted.

See "FRAMING PLAN AND TYPICAL SECTION" Dwg. for Shear Connector and Rail Post spacing.

Deflect forms to compensate for camber.

Galvanize structural steel embedded in girders except for shear connectors.

Ⓐ 1"X1'-0" Coil Anchor Insert for vertical adjustment of girders. Recess 2". Prevent concrete from filling hole.

Omit Shear Key, Shear Key Connector and Deck Void in exterior face of exterior girders.

Cast ends of girders plumb with respect to roadway grade. Install web holes and web anchor inserts parallel to ℄ bearing.

Finish top flange with Light broom finish.

PRELIMINARY

DESIGNED BY: Elmer Marx	CHECKED: Checker	PRELIMINARY PLAN	STATE OF ALASKA DEPARTMENT OF TRANSPORTATION AND PUBLIC FACILITIES BRIDGE SECTION 3132 Channel Drive Juneau, Alaska 99801 907-465-2975
DRAWN BY: Sam Sollie	CHECKED: Elmer Marx		
QUANTITIES BY: Elmer Marx	CHECKED: Checker		

VICTOR CREEK BRIDGE
SEWARD HIGHWAY
GIRDERS

BRIDGE NO. 607
DWG. NO. 12

R:\cad\603,605,607\607-1-GIRDERS Tue, Feb/27/18 02:54pm

STATE	PROJECT DESIGNATION	YEAR	SHEET NO.	TOTAL SHEETS
ALASKA	311032/Z536100000	2018	N38	

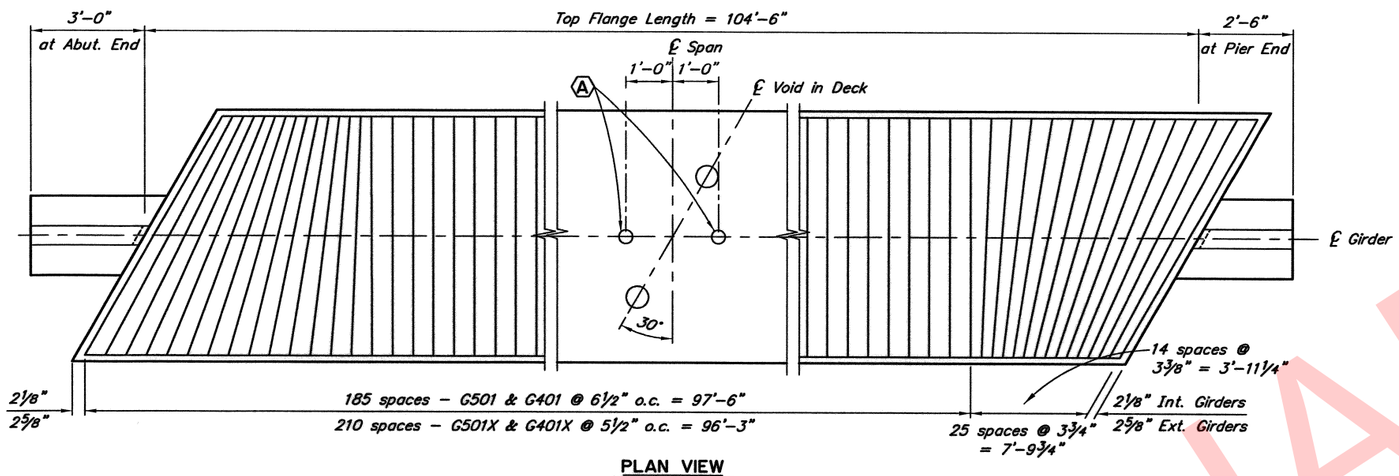

PLAN VIEW

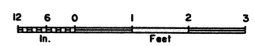

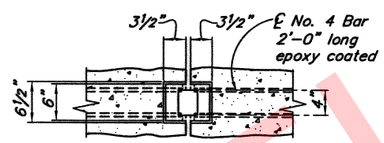

VIEW D-D

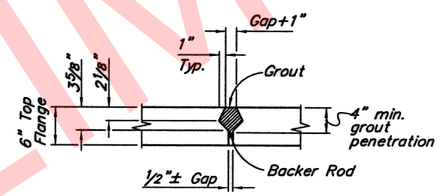

SHEAR KEY DETAIL

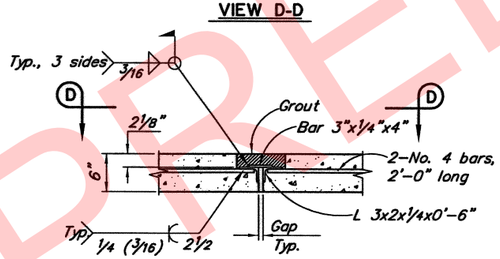

SHEAR CONNECTOR DETAIL

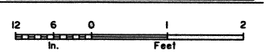

PRELIMINARY

DESIGNED BY: Elmer Marx	CHECKED: Checker	PRELIMINARY PLAN	STATE OF ALASKA DEPARTMENT OF TRANSPORTATION AND PUBLIC FACILITIES BRIDGE SECTION 3132 Channel Drive Juneau, Alaska 99801 907-465-2975
DRAWN BY: Sam Sollie	CHECKED: Elmer Marx		
QUANTITIES BY: Elmer Marx	CHECKED: Checker		

VICTOR CREEK BRIDGE

SEWARD HIGHWAY

GIRDER DETAILS

BRIDGE NO. 607

DWG. NO. 13

R:\cad\603,605,607\607-1-GIR DETAILS Tue, Feb/27/18 02:54pm

STATE	PROJECT DESIGNATION	YEAR	SHEET NO.	TOTAL SHEETS
ALASKA	311032/Z536100000	2018	N39	

REINFORCING STEEL - ONE APPROACH SLAB

MARK	NOTE	SIZE	NO.	LENGTH	TYPE	BENDING DIAGRAM
S401	E,M,S	4	62	42'-2"	---	
S501	E	5	74	20'-5"	---	
S502	E	5	37	5'-0"	BENT	2'-0" / 3'-0" / S502
S801	E	8	74	20'-5"	---	

E – Epoxy-Coated
M – Field adjust to match crown
S – Splices permitted. Length does not include splice

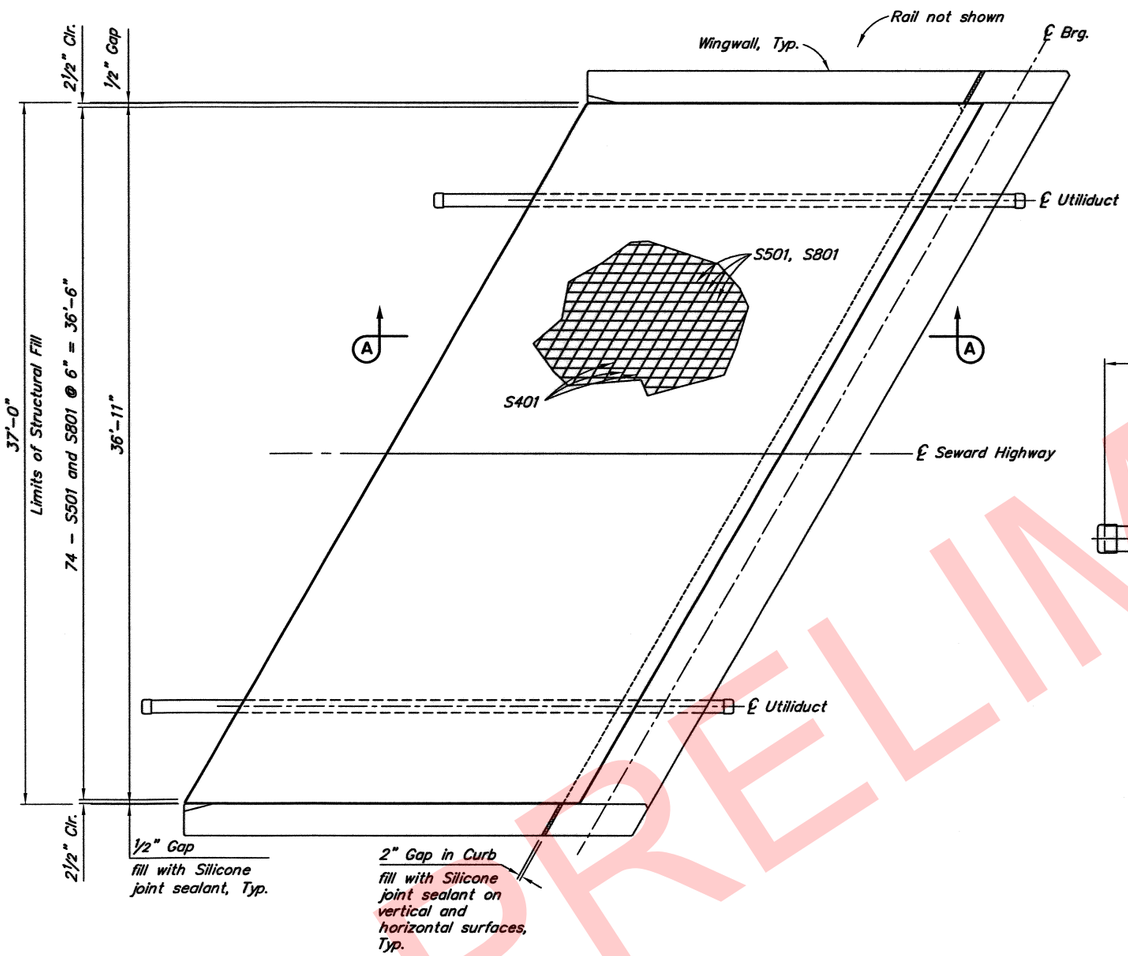

PLAN
(Abutment 1 shown Abutment 3 similar)

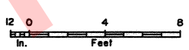

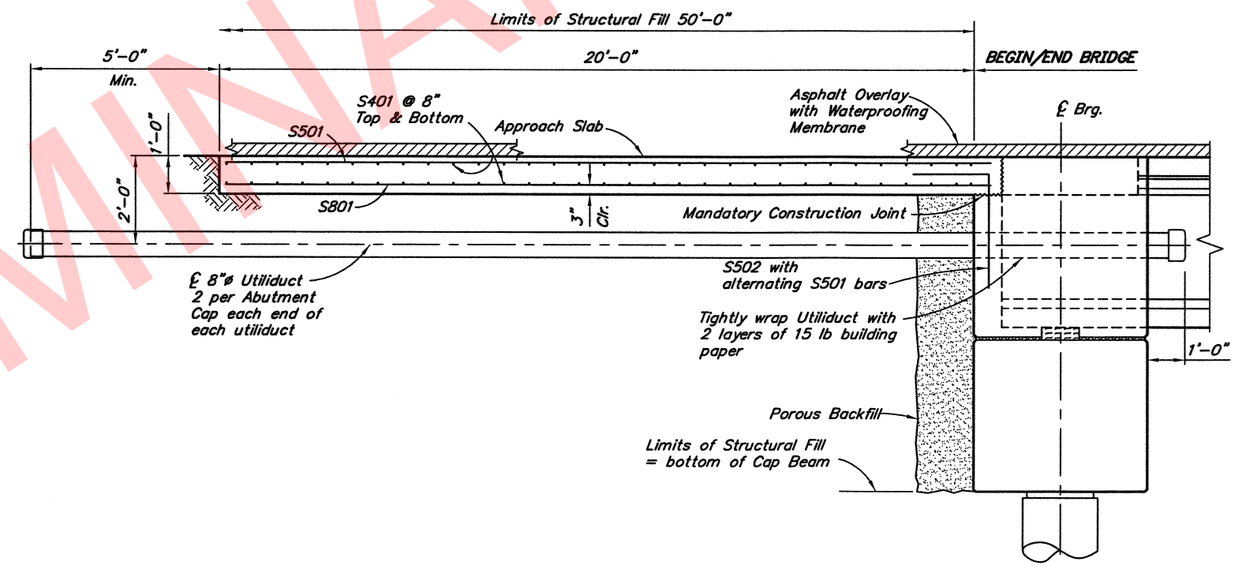

SECTION A-A

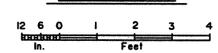

PRELIMINARY

DESIGNED BY: Elmer Marx	CHECKED: Checker	PRELIMINARY PLAN	STATE OF ALASKA DEPARTMENT OF TRANSPORTATION AND PUBLIC FACILITIES BRIDGE SECTION 3132 Channel Drive Juneau, Alaska 99801 907-465-2975
DRAWN BY: Sam Sollie	CHECKED: Elmer Marx		
QUANTITIES BY: Elmer Marx	CHECKED: Checker		

VICTOR CREEK BRIDGE
SEWARD HIGHWAY
APPROACH SLABS

BRIDGE NO. 607
DWG. NO. 14

R:\cad\603,605,607\607-1-APPROACH Tue, Feb/27/18 02:54pm

STATE	PROJECT DESIGNATION	YEAR	SHEET NO.	TOTAL SHEETS
ALASKA	311032/Z536100000	2018	N 40	

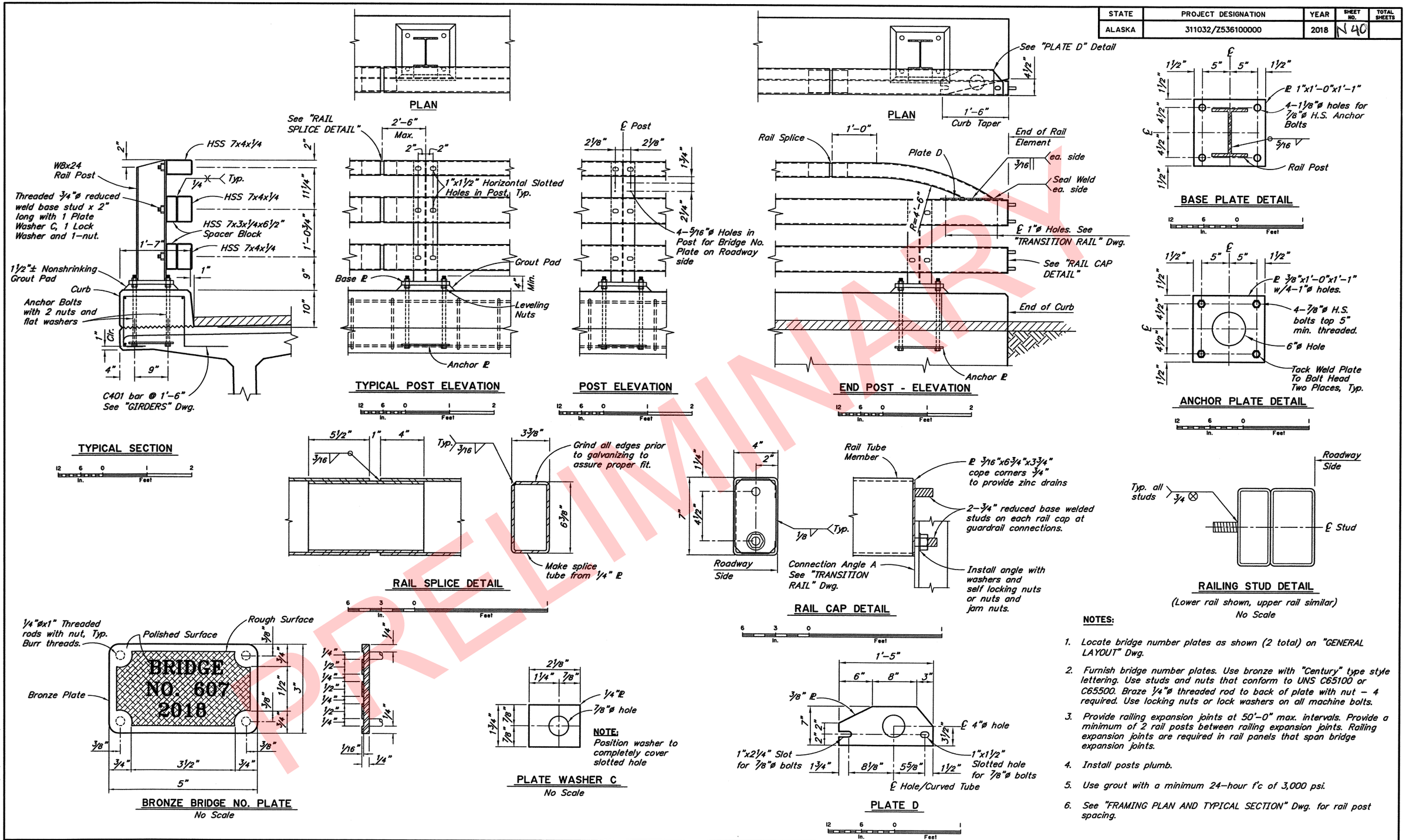

NOTES:

1. Locate bridge number plates as shown (2 total) on "GENERAL LAYOUT" Dwg.
2. Furnish bridge number plates. Use bronze with "Century" type style lettering. Use studs and nuts that conform to UNS C65100 or C65500. Braze ¼"ø threaded rod to back of plate with nut – 4 required. Use locking nuts or lock washers on all machine bolts.
3. Provide railing expansion joints at 50'-0" max. intervals. Provide a minimum of 2 rail posts between railing expansion joints. Railing expansion joints are required in rail panels that span bridge expansion joints.
4. Install posts plumb.
5. Use grout with a minimum 24-hour f'c of 3,000 psi.
6. See "FRAMING PLAN AND TYPICAL SECTION" Dwg. for rail post spacing.

DESIGNED BY: Elmer Marx	CHECKED: Checker	PRELIMINARY PLAN	STATE OF ALASKA DEPARTMENT OF TRANSPORTATION AND PUBLIC FACILITIES BRIDGE SECTION 3132 Channel Drive Juneau, Alaska 99801 907-465-2975
DRAWN BY: Sam Sollie	CHECKED: Elmer Marx		
QUANTITIES BY: Elmer Marx	CHECKED: Checker		

VICTOR CREEK BRIDGE

SEWARD HIGHWAY

STEEL BRIDGE RAILING

BRIDGE NO. 607

DWG. NO. 15

R:\cad\603,605,607\607-1-RAIL Tue, Feb/27/18 02:54pm

STATE	PROJECT DESIGNATION	YEAR	SHEET NO.	TOTAL SHEETS
ALASKA	311032/Z536100000	2018	N41	

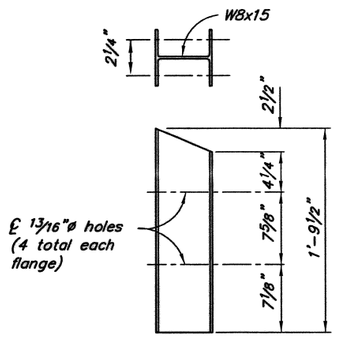

STEEL BLOCKOUT

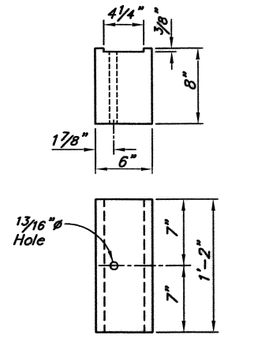

WOOD BLOCKOUT

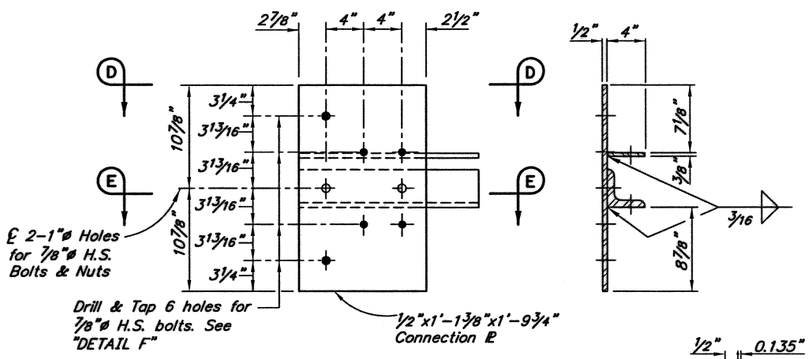

GUARDRAIL CONNECTION PLATE DETAILS

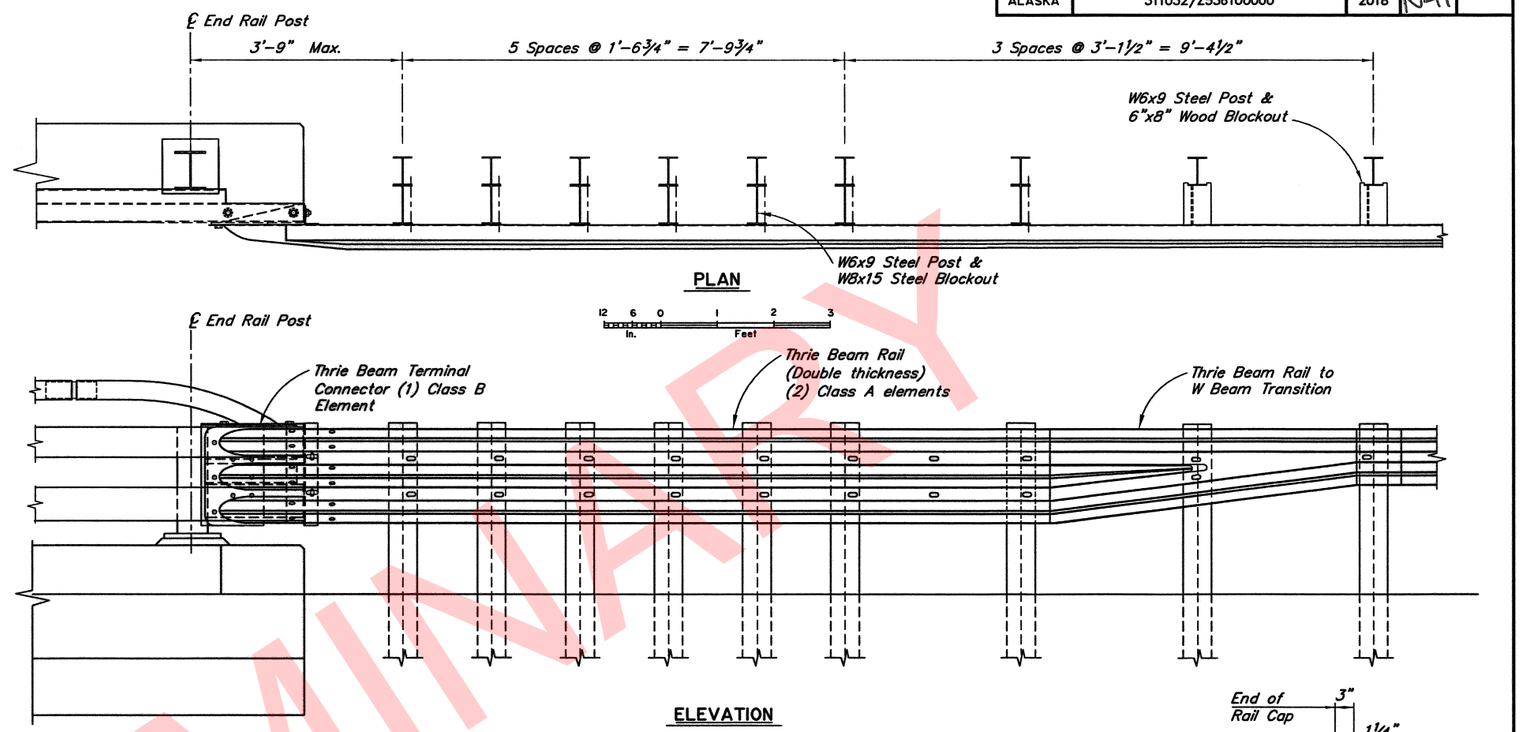

PLAN

ELEVATION

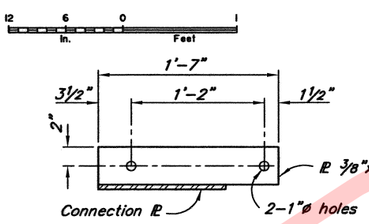

VIEW D-D

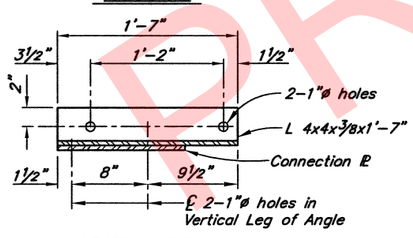

SECTION E-E

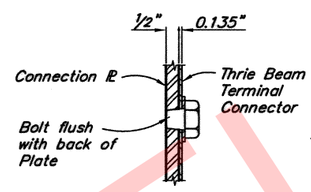

DETAIL F

No Scale

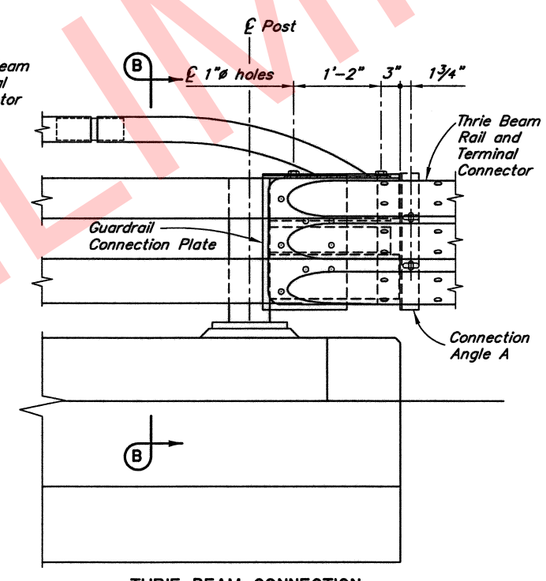

THRIE BEAM CONNECTION

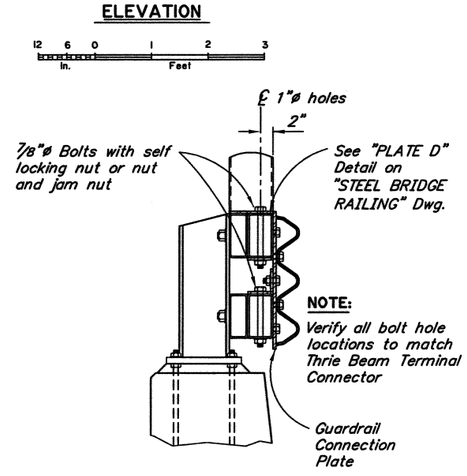

SECTION B-B

NOTE:

Verify all bolt hole locations to match Thrie Beam Terminal Connector

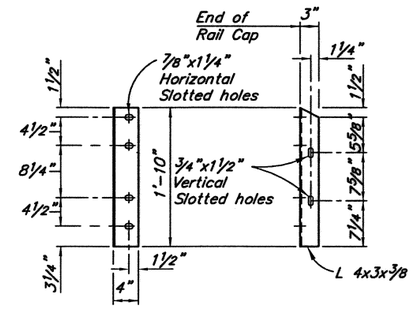

CONNECTION ANGLE A

NOTES:

1. Conform to G-00, G-04S and G-10 for all guardrail details not shown.
2. Lap approach guardrail to prevent snags from oncoming traffic.
3. Provide 4½" horizontal slots in approach guardrail. Adjust guardrail bolts for sliding fit.

PRELIMINARY

DESIGNED BY: Elmer Marx	CHECKED: Checker	PRELIMINARY PLAN	STATE OF ALASKA DEPARTMENT OF TRANSPORTATION AND PUBLIC FACILITIES BRIDGE SECTION 3132 Channel Drive Juneau, Alaska 99801 907-465-2975
DRAWN BY: Sam Sollie	CHECKED: Elmer Marx		
QUANTITIES BY: Elmer Marx	CHECKED: Checker		

VICTOR CREEK BRIDGE

SEWARD HIGHWAY

TRANSITION RAIL

BRIDGE NO. 607

DWG. NO. 16

R:\cad\603,605,607\607-1-TRANSITION Tue, Feb/27/18 02:54pm